HIVE Flow

HIVE Flow Mini

ENG	SAUNA STOVE	2-31
EST	SAUNAAHI	32-61
GER	SAUNAOFEN	62-92
FRA	POÊLE POUR SAUNA	94-123
ITA	STUFA PER SAUNA	124-153
ESP	ESTUFA DE SAUNA	154-183
CZE	SAUNOVÁ KAMNA	184-213
CRO	PEĆ ZA SAUNU	214-243
HUN	SZAUNAKÁLYHA	244-273
LVA	PIRTS KRĀSNS	274-302
LTU	PIRTIES KROSNELĖ	304-332

Patent pending
BimSchV II
Ecodesign 2015/1185

info@huum.eu www.huum.eu
Vahi tee 9, Tartu vald, 60534, Estonia

ENG

TABLE OF CONTENTS

GENERAL **4**

INSTALLATION **6**

PRE-INSTALLATION HEATING 6

BASE SURFACE 8

SAFETY DISTANCES 8

CONNECTION TO THE FLUE 11

SAUNA ROOM **12**

WALL MATERIALS AND INSULATING OF THE SAUNA ROOM 12

DARKENING OF THE SAUNA ROOM WALL 13

FLOOR OF THE SAUNA ROOM 13

VENTILATION 14

USE **15**

LAYING OF STONES 15

HEATING 16

STARTING THE HEATING 17

FILLING THE HEARTH DURING HEATING 18

MAKING STEAM 20

FINISHING THE HEATING 20

MAINTENANCE **21**

REMOVAL FROM USE **22**

WARNINGS AND NOTES **22**

SOLVING PROBLEMS **23**

WARRANTY **25**

APPENDIX 1 - TECHNICAL DATA OF THE SAUNA STOVE **26**

APPENDIX 2 - DECLARATION OF HIVE FLOW PERFORMANCE **27**

APPENDIX 3 - DECLARATION OF HIVE FLOW MINI PERFORMANCE **28**

APPENDIX 4 - SPARE PARTS **29**

APPENDIX 5 - ACCESSORIES **30**

FSC www.fsc.org MIX Paper | Supporting responsible forestry FSC® C092678

HIVE Flow

SAUNA STOVE

Installation and operation manual

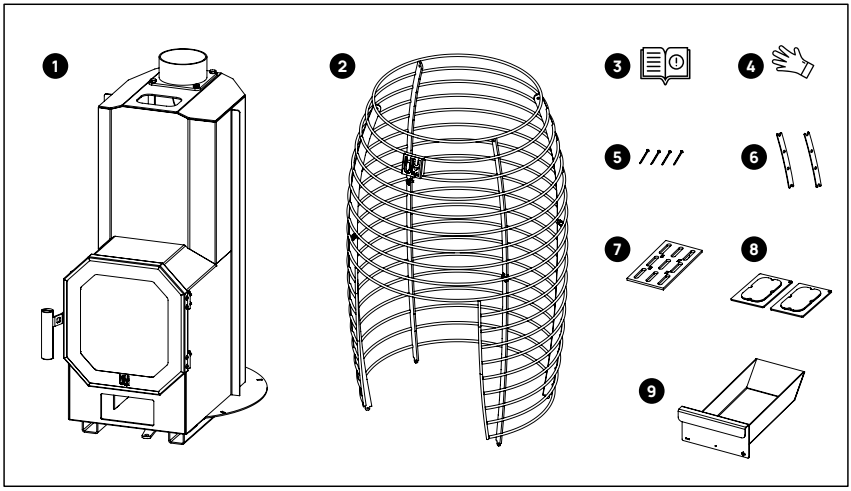

HUUM HIVE Flow sauna stoves include:

1. sauna stove heated by firewood;
2. metal grate;
3. sauna stove installation and operational manual;
4. heat resistant glove;
5. splints;
6. metal fixing plates (2 pcs);
7. ash grate;
8. cleaning hatches (2 pcs);
9. ash drawer.

Spare parts article numbers can be found in the **Appendix 4 and 5**

ATTENTION! **A sauna stove needs stones. We recommend using HUUM 5-10cm sauna stones (See Appendix 5, page 30-31).**

ATTENTION! **Only the specialist of the relevant field may connect the wood-burning sauna stove described in the manual to the chimney.**

ENG

GENERAL

Thank you for choosing **HUUM Flow.** You have choosen a unique sauna stove that is the cleanest woodburning stove on the market. You will not just have an unforgettable sauna experience, but also keep the enviroment clean.

For an optimal and safe sauna experience, it is strongly recommended to review the operation manual and retain it for future consultation.

The latest operation manual can always be found on HUUM's website: huum.eu

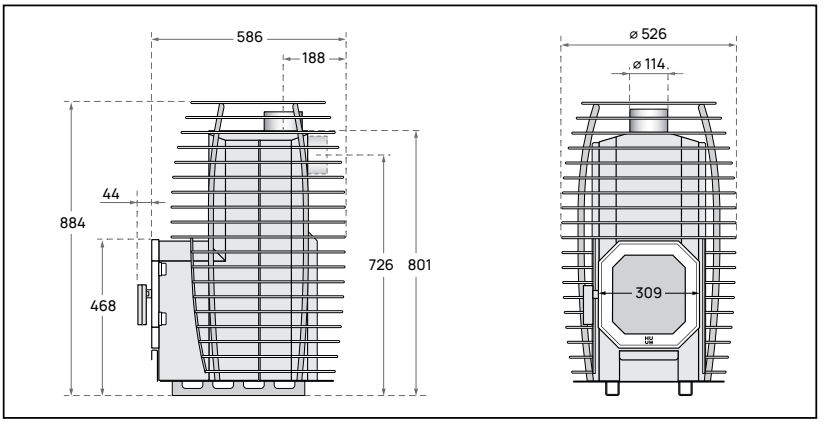

Figure 1. Dimensions of the HIVE Flow sauna stove.

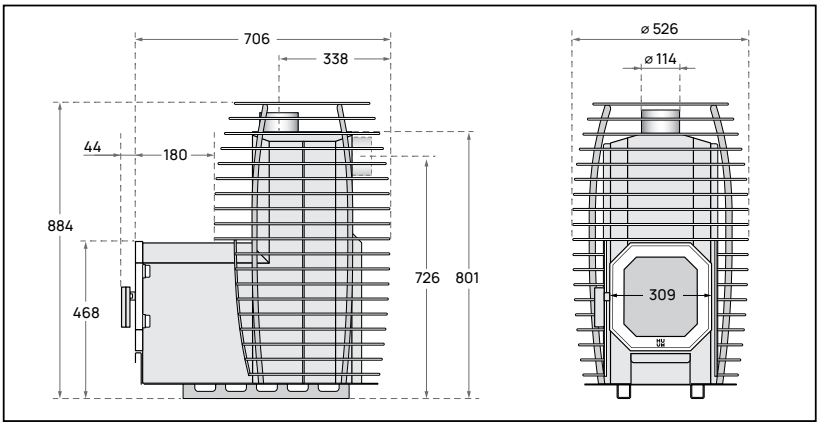

Figure 2. Dimensions of the HIVE Flow LS sauna stove.

- The operation manual contains technical data for the sauna stove as well as instructions for installation, operation, and maintenance.
- The product is intended solely for use as a sauna stove.
- Changing the construction of the sauna stove is strictly prohibited and may result in serious malfunction. It will result in termination of the warranty.
- Use only HUUM spare parts offered by the manufacturer. **Appendix 4, page 29.**
- Changing or removing the data label attached to the sauna stove is prohibited.
- The technical data of the sauna stove has been provided in **Appendix 1.**

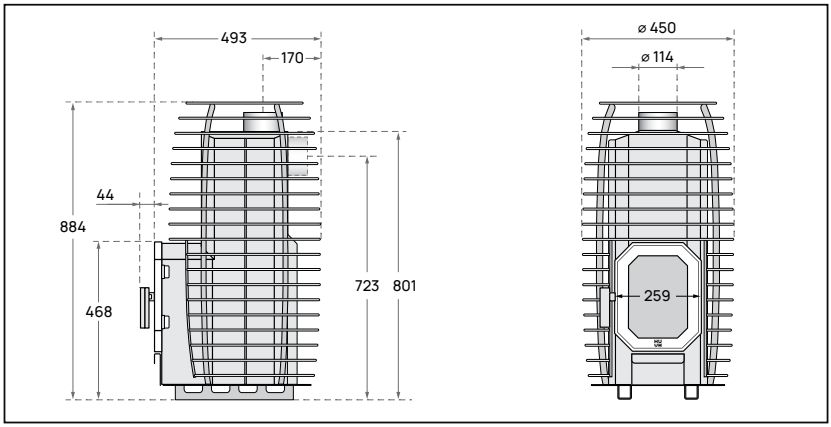

Figure 3. Dimensions of the HIVE Flow Mini sauna stove.

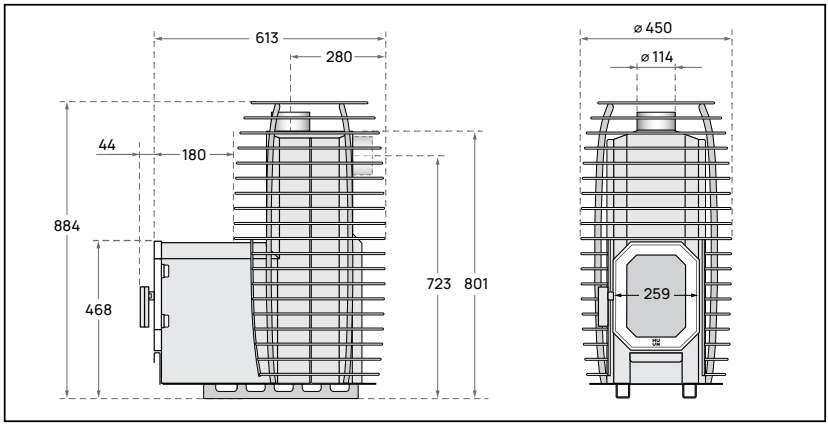

Figure 4. Dimensions of the HIVE Flow Mini LS sauna stove.

INSTALLATION

- All relevant local regulations should be followed when installing the sauna stove, including those referring to country specific standards and European standards.
- Before installing and using the sauna stove, thoroughly review the requirements for installing the sauna stove in the sauna room. If you have questions or to obtain additional information, be sure to contact the local or national fire safety agency or consult an authorized specialist.
- Before installation, make sure the power rating of the stove corresponds to the volume of the sauna room. The suitable cubic capacity of the sauna room has been provided in **Appendix 1**. If there are uninsulated brick, tile or glass walls in the sauna room, an additional sauna room volume of 1 m^3 should be calculated for each square meter of such a wall.
- The maximum room size where this stove is allowed to be installed has been presented according to the methodology provided in standard EN15821:2010.

ATTENTION! **The manufacturer's warranty is void if the capacity of the sauna stove does not correspond to the volume of the sauna room, non-insulated surfaces are not taken into account and/or there is insufficient ventilation in the sauna.**

See more about best practices for sauna construction

PRE-INSTALLATION HEATING

ATTENTION! **Before installation, the sauna stove must be heated outdoors at least once while following general fire safety precautions.** This is necessary as the protective paint layer of the body of the sauna stove emits harmful and unpleasant-smelling fumes during the first heating. The paint gains durable properties during the first heating.

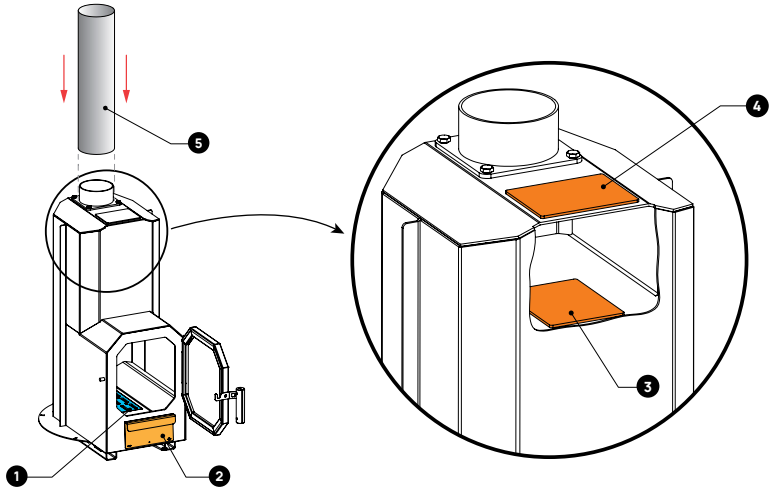

1. Place the ash grate in place
2. Push the ash drawer into place
3. Install the lower cleaning hatch through the opening of the upper cleaning hatch
4. Install the upper cleaning hatch
5. Add a flue pipe to the leg of the chimney to improve draft. Preferably at least 1 metre (not included in the set).

Figure 5. Assembling the stove for pre-installation heating.

Heat the sauna stove in well-ventilated outdoor area that is sheltered from the wind. This will enable the stove surfaces heat up evenly.

- Before heating for the first time, be careful not to scratch the surface of the sauna stove.
- Remove the stone grate for pre-installation heating.
- Do not lay stones on the body of the sauna stove.
- Do not throw water on the sauna stove during first heating.
- 1-2 hearths of firewood is enough for the first heating.
- You can stop heating when no visible smoke or steam is released from the surface of the stove.
- During the pre-installation heating, keep the door slightly open. Do not close the door at any stage during the first heating. (See Figure 6.)

  ATTENTION! The door seal may stick to the heater body and detach!

- To improve draft, you can use flue pipes used in final installation.

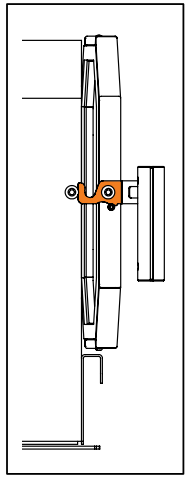

Figure 6. Door position

ENG

BASE SURFACE

The sauna stove is installed in the sauna room to the floor of non-combustible material with sufficient load-bearing capacity. The concrete floor with the thickness of at least 50 mm is suitable.

If the floor heating cables or pipes are located under the sauna stove, the thermal plate for HUUM sauna stoves or other non-combustible material and additional protection with sufficient thickness and load-bearing capacity should be used to protect these from heat radiation. The information on HUUM thermal plate has been provided in **Appendix 5, page 30.**

In case of the floor made of combustible material, it is mandatory to use the thermal plate for HUUM sauna stoves or some other non-combustible material and additional protection with sufficient thickness and load-bearing capacity. The ventilation gap of at least 30 mm is mandatory between such a base and the floor, so that air can move freely.

SAFETY DISTANCES

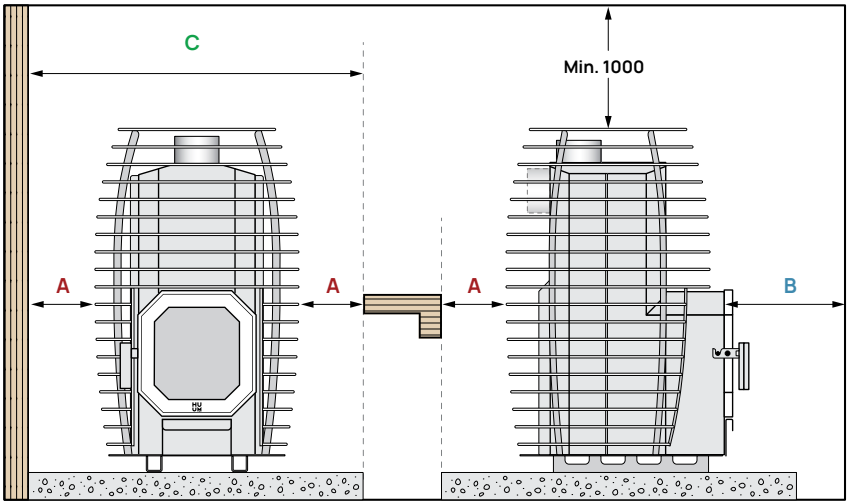

Figure 7. Safety distances of HIVE Flow sauna stove from flammable materials (e.g. wooden wall, bench etc).

Table 1.	Room m^3	Weight kg	Quantity of stones kg	A mm	B mm	C mm
Flow	8-18	67	150	150	500	826
Flow LS	8-18	73	150	150	500	826
Flow Mini	6-14	54	105	150	500	750
Flow Mini LS	6-14	59	105	150	500	750

There should be at least 50 mm between the wall of **non-combustible material** and the stove.

Safety distances can be reduced by using protective screens made of non-combustible material. The single-layer light protective screen allows to reduce the safety distances by 50% and the double light protective screen by up to 75%. The protective screen is included in the safety distance, which means that the distance is measured to the flammable material, not to the protective screen. There should be a gap of at least 50 mm between the protective screen and the sauna stove.

The safety distance between the sauna stove and the ceiling can be reduced by 25% by using the single protective screen. The double protective screen is not used in the ceiling.

The single light protective screen is made of at least 7 mm thick non-combustible, fibre-reinforced cement board or of at least 1 mm thick metal plate, which is firmly attached to the wall. An air gap of at least 30 mm should remain between the surface to be protected and the protective screen.

The double protective screen can be made of the same materials as mentioned above. There should be an air gap of at least 30 mm between the protective screen and the wall. There should be an air gap of at least 30 mm between the protective screen and the floor and ceiling to ensure adequate air circulation.

ATTENTION! **Before reducing the safety distance, please check the local safety laws and regulations in your country.**

When installing flues, the safety distances specified in the instruction manual of the respective manufacturer should be followed.

To **protect flooring made of combustible material** in front of the sauna stove, the sheet metal plate should be attached to the floor in front of the stove, which extends at least 100 mm beyond the sides of the door opening of the stove, and at least 400 mm in front of the stove. The edge of the plate closest to the stove side should be bent up so that the coal falling from the sauna stove does not get under the stove. Information on HUUM floor protection plate (sold separately) has been provided in **Appendix 5, page 30.**

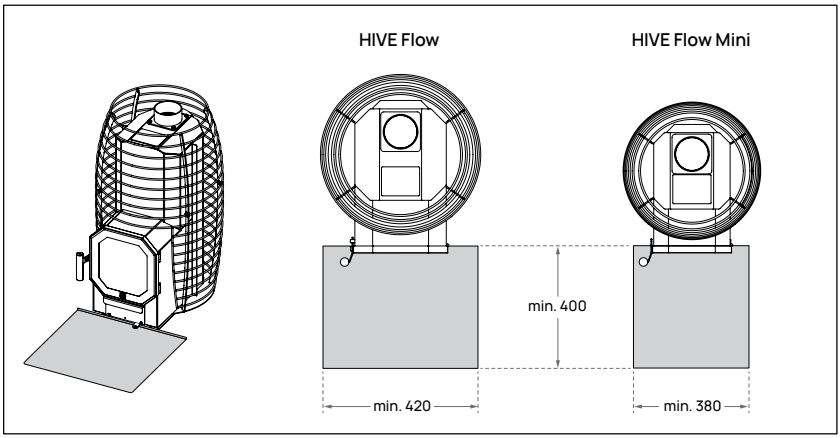

Figure 8. HIVE Flow and Flow Mini sheet metal plate for floor protection (sold separately).

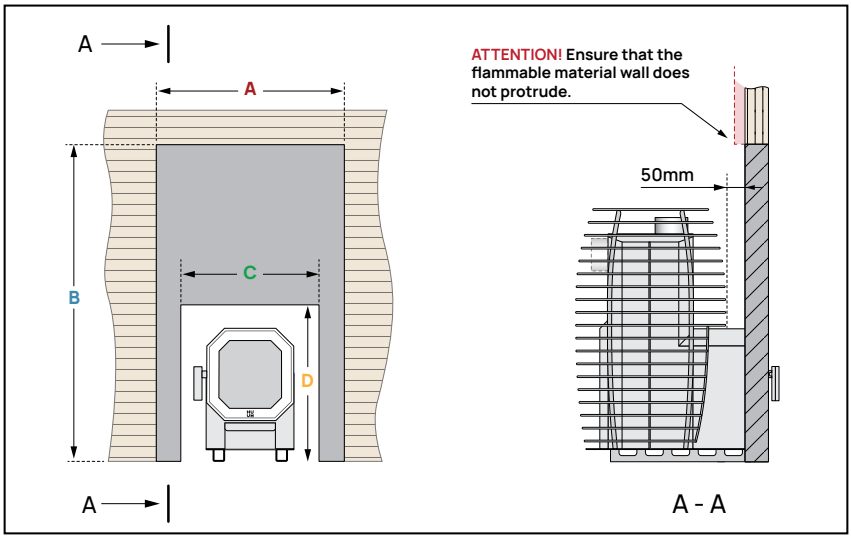

Figure 9. Installing HIVE Flow LS and Flow Mini LS sauna stoves through the wall.

The minimum dimensions for the non-combustible wall and the opening in the case of HIVE Flow LS are provided in **Table 2**. For HIVE Flow Mini LS, see **Table 3**.

Table 2.	A mm	B mm	C mm	D mm
Sauna stove on the floor, without mounting collar.	650	1050	320	470
Sauna stove on the floor, with HUUM mounting collar.	650	1050	485	560
Sauna stove on protective bedding, with HUUM mounting collar.	650	1100	485	615

Table 3.	A mm	B mm	C mm	D mm
Sauna stove on the floor, with no mounting collar	650	1050	270	470
Sauna stove on the floor, with HUUM mounting collar.	650	1050	435	560
Sauna stove on protective bedding, with HUUM mounting collar.	650	1100	435	615

The protective bedding and mounting collar are accessories designed to simplify installation and add finishing touches. These items are sold separately. The maximum thickness of the non-combustible wall when using HUUM mounting collars is up to 150mm, and without it up to 100mm. Please refer to **Appendix 5** for more details.

CONNECTION TO THE FLUE

ATTENTION! **The connection between the sauna stove and the flue can only be made by a certified installation expert.**

The flue (chimney) must comply with the specifications provided in **Appendix 1.**

HIVE Flow sauna stove can be connected to the flue both from the top and back of the sauna stove. To connect from the back, the positions of the bolted chimney leg and cover plate should be changed.

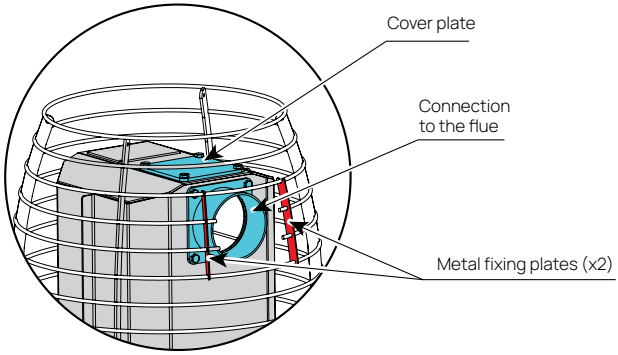

Figure 10. HIVE Flow back connection. The two ribs should be cut according to the diameter of the chimney element and the loose ends of the ribs should be fixed with the metal fixing plates found in the package.

- To connect the sauna stove to the flue, only flue pipes approved by the local fire and safety regulations should be used. HUUM offers standard chimney sets, the details of which can be found in **Appendix 5**.
- The joints of the chimney system should be sealed using the special heat-resistant rope and/or stone wool.
- When installing flues, the safety distances specified in the respective manufacturer's instructions should be followed.

The average and maximum flue gas temperature of the sauna stove heated according to the manual is below 400°C. Therefore, the sauna stove can be connected to an existing flue gas system that already has a fireplace connected.

ATTENTION! **Be sure to coordinate this with the local government and rescue board / fire department in advance, as requirements may vary from region to region.**

SAUNA ROOM

WALL MATERIALS AND INSULATING OF THE SAUNA ROOM

In a sauna, all heat accumulating wall surfaces (glass and concrete walls, brick, plaster, etc.) should be insulated in order to use the woodburning stove with optimal output. This prevents heat loss in the sauna room and overheating of the stove.

The following sauna construction guidelines can help ensure a well-insulated sauna room:

1. An insulation layer of 50-100mm thickness is installed (foam insulation boards covered with a vapour barrier foil suit well).
2. Aluminium foil or other reflective material on top of the insulation material without a vapour barrier. The joints are covered with foil tape.
3. 10mm ventilation gap (recommended) is left between the moisture barrier and the lining board with spacers.
4. 12-16 mm wooden lining board is suitable for interior finishing. Before installing the lining boards, check for power cables and reinforcements in the walls that are necessary for equipment installations, e.g. a sauna bench.
5. To prevent moisture from the floor, the distance between the board and the floor should be at least 100 mm.
6. There is a minimum ventilation gap of 5 mm between the wall and ceiling board.
7. Wooden sauna surfaces can be coated with sauna wax or oil to prevent dirt being absorbed into the wood.

Ceiling of the sauna room

To optimize the sauna stove's output, the recommended height of the sauna room is 2000 - 2300 mm. In case of a higher sauna room, it is advisable to lower the ceiling, thus reducing the volume of the sauna room.

1. The minimum permissible height of the sauna room for **HUUM Flow** sauna stove is **1900 mm.**
2. The distance between the top step of the sauna bench and the ceiling should be between 1100 and 1300 mm.
3. The ceiling of the sauna room should be insulated in the same specification as the walls.

ATTENTION! When covering the walls or ceiling with heat protection (e.g. with mineral tiles), a sufficient ventilation gap should be left between the materials. Installing tiles directly on a wall or ceiling surface can cause dangerous overheating of wall and/or ceiling materials.

ATTENTION! Check with your local authorities responsible for fire safety regarding parts of the firewall can be insulated. It is forbidden to insulate flues in use.

DARKENING OF THE SAUNA ROOM WALLS

Over time, the wooden materials used in the sauna room may begin to darken due to the high temperature. This is a natural process that does not pose a risk and is usually caused by the darkening of the wood or the wood protection product used.
The darkening process can also be caused by the fine stone dust, breaking away from the sauna stones and lifted up by the airflow. By following the manufacturer's instructions when installing the sauna stove, flammable materials in the sauna room may not become dangerously hot.

ATTENTION! The highest allowed temperature for the wall and ceiling surfaces of the sauna room is 140 °C.

FLOOR OF THE SAUNA ROOM

Due to large changes in temperature, the sauna stones may crumble over time. Together with the sauna water, particles released from the stones and fine stone dust are washed onto the sauna floor. Hot stone chips can damage plastic covered floors under and near the sauna stove. The splashes of heating stones and sauna water (especially for iron-rich water) can be absorbed into the caulking of the tile floor.

In order to avoid aesthetic damage, ceramic tiles and dark joint filler should be used under and around the sauna stove.

VENTILATION

The ventilation of the sauna room should be efficient enough to accommodate burning requirements (one kilogram of wood requires 6 - 10 m³ of oxygen-rich air to burn). The fresh incoming air should be directed as close to the sauna stove as possible.

For a healthy and pleasant sauna experience, it is important that proper air circulation is ensured in the sauna room during sauna use. You can find instructions on the proper sauna ventilation solution on
HUUM's website: huum.eu "HUUM Blog - Sauna ventilation"

After using the sauna, the room should be ventilated to get rid of excess humidity.

ATTENTION! **The use of forced ventilation can cause room air exchange problems and insufficient combustion air in the hearth.** Before installing and using the sauna stove, make sure that the existing ventilation system allows the use of the hearth. If necessary, contact the HVAC engineer or sauna installer for more information.

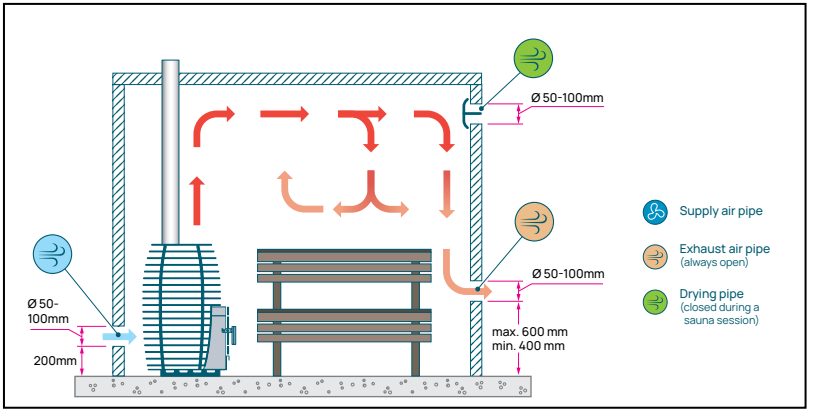

Figure 11. Gravity-based ventilatsion in a wood-fired sauna

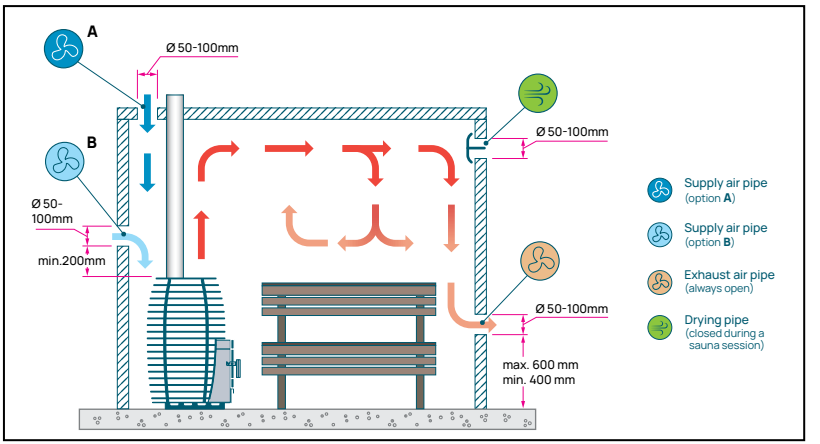

Figure 12. Mechanical ventilation in a wood-fired sauna

USE

LAYING OF STONES

We recommend using special HUUM sauna stones **(see Appendix 5, page 30)**.
The stones found in nature may not be suitable for saunas, as these may crumble or/and release toxic chemicals.

- Before laying the stones, we recommend washing the stones clean of dust under running water.
- Before laying the stones, make sure that the cleaning hatches are securely in place.
- The size and quantity of suitable stones for the sauna stove have been provided in **Appendix 1.**
- HIVE Flow stone grate can be split. To insert and remove the lower stones, the upper part of the grate should be removed and raised as far as the chimney connection allows **(Figure 13)**.
- The stones should be laid evenly layer by layer. Do not push stones between the stone grate and the hearth with force.
- Do not lay a high pile of stones, and make sure before the first use all stones are level with the top of the stone grate **(Figure 14)**.

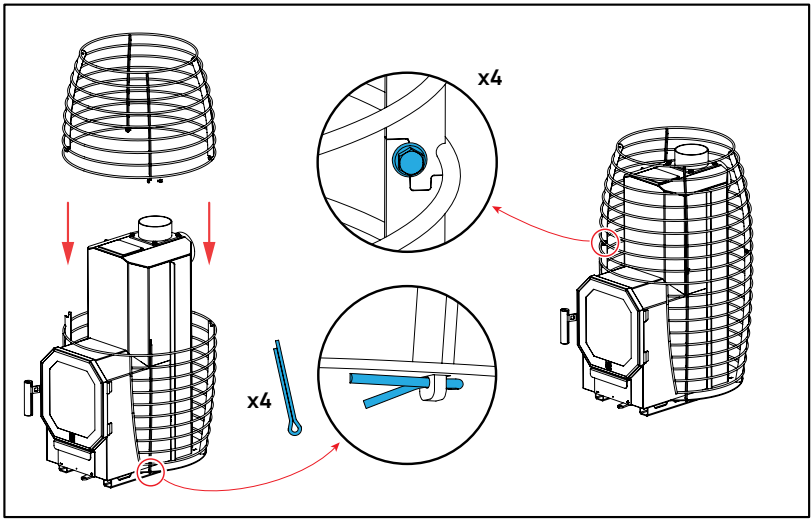

Figure 13. Splitting HIVE Flow stone grid.

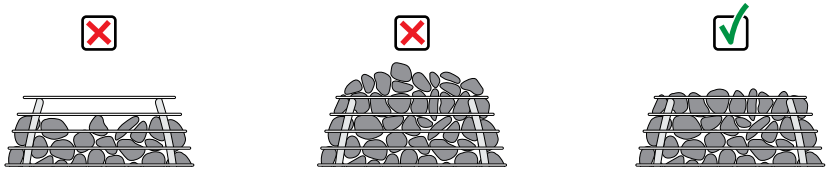

Figure 14. Laying of HIVE Flow stones.

HEATING

Tutorial video

ATTENTION! Before installation, the sauna stove must be heated outdoors at least once while following general fire safety precautions.

- Before starting the heating, make sure that there are safety distances around the sauna stove and there are no flammable objects or materials on top of the sauna stove.
- The sauna stove may only be heated with firewood. Both hardwood and softwood are suitable.
- Do not exceed the maximum amount of firewood, in kilograms, as specified in **Figures 16** and **Figure 17**.
- The optimum humidity of firewood is 10-15%. Very dry and fine firewood burn too intensively, thereby increasing the risk of overheating and excessive heating of the flues. Excessively moist wood burns poorly and tars the door and flues of the sauna stove.

ATTENTION! The use of other fuels, including liquid fuels, is prohibited!

- The most suitable firewood length is 30 cm. The maximum length of the log is 40 cm.
- The firewood added to the hearth could be of the same size and thickness. In this way, combustion takes place most evenly.
- The firewood weighing around 0.4 - 0.7 kg are most suitable for heating the sauna stove. Very thick firewood burns for a long time and the sauna takes longer to warm up. Very fine firewood burn too quickly, and the sauna stove and stones cannot store the heat.

ATTENTION! It is forbidden to cover the sauna stove!

- If a water tank is installed on the flue pipe of the sauna stove, fill it with clean water before starting the heating.
- Make sure that the ash grate is not blocked, clean it with the fire poker if necessary. Leave unburned coals from the previous time on the grate. Empty the ash drawer when it is more than half full.
- Avoid ash and combustion residues entering the lower space of the hearth, under the ash drawer. If necessary, remove the ash drawer and clean.
- To remove the ash drawer for emptying, open the hearth door, lift the ash drawer slightly and then pull it out (the ash drawer has a safety limiter that prevents it from being opened excessively during heating). See **Figure 15**.

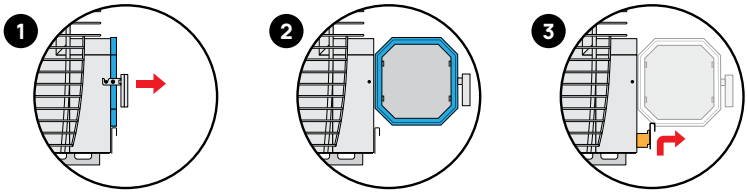

Figure 15. Removing HIVE Flow ash drawer.

ATTENTION! **Ashes and coals should be completely extinguished and cooled before emptying the ash drawer into a fire resistent waste bucket or combustible material container.**

- Make sure there is a draft in the chimney. If in doubt, check the draft, by burning some paper in the hearth of the sauna stove.
- The maximum quantity of firewood provided in **Appendix 1** of the operation manual should not be exceeded. The firewood should not be added to the hearth of the sauna stove more often than the minimum intervals provided in **Appendix 1.**
  In case of very dry and also fine firewood, the amount of heating material should be reduced.
  ATTENTION! **Make sure you don't overheat the sauna stove!**
  If the surface of the sauna stove turns red, it is overheating. In this case, immediately close the air valve at the bottom of the stove to reduce the intensity of the combustion. The manufacturer is not responsible for deformations and damages of the sauna stove that have occurred as a result of overheating.

The firewood to be inserted to the hearth should be weighed at least for the first few times of heating. Later, this process could be repeated from time to time, especially if you change the length or type of firewood. An ordinary bathroom scale is suitable for weighing firewood.

STARTING THE HEATING

The first batch should consist of medium-sized firewood and a small amount of fine chips. The maximum quantity of firewood in kilograms has been provided in **Appendix 1**

- Lay the thinner firewood for the bottom layer.
- Put the thickest ones as the middle layer.
- Cover the middle layer with thin firewood with chips for kindling.
- Place the firewood as far back as possible in the hearth, leaving about 10 mm of free space between the firewood and the back wall.
- Lay the firewood tightly to the hearth, leaving air gaps between the firewood is not necessary.

Ignition should take place from the **upper quarter** of the heating material.
It is convenient to use a fire starter (non-liquid) or birchbark for lighting.

ATTENTION! **Never light the fire from the bottom!**
This causes burning that wastes fuel and pollutes the environment. Also, both the stove and the chimney heat up more slowly and the heating process takes longer.

Tutorial video

- **The air valve at the edge under the front part of the sauna stove** should be fully opened. If the draft in the chimney is too big and the burning is very intense, the burning speed can be reduced by adjusting the air valve.

- **Keep the ash drawer open for up to 15 minutes** after lighting. The ash drawer has a limiter that prevents it from being opened more than 3 mm.
- **The hearth door can be kept open for approximately 2 minutes** after lighting. A few millimetres are enough. This reduces moisture condensation and soot sticking to the door glass.
- **No later than 15 min after lighting** (or earlier, when combustion has reached good momentum), **close the ash drawer completely** (push the drawer in). Leave it closed during the entire heating period, including when adding subsequent amounts of wood.

Removing the ash drawer during heating is prohibited. An open or missing ash drawer creates a risk of overheating and inefficient combustion.

ATTENTION! **The manufacturer is not responsible for the consequences caused by overheating. An improperly heated sauna stove is not covered by the warranty.**

CAUTION! **The outer surfaces and stones of the sauna stove are very hot when using the stove! Do not touch!**

ATTENTION! **Do not open the stove door during the intense burning phase. If it is necessary for some reason, first open the door a few millimetres for 10 seconds. Then you can open the door as much as necessary. Otherwise, flames may shoot out of the hearth.**

FILLING THE HEARTH DURING HEATING

Adding firewood only takes place when the first batch has burned out, i.e. the firewood is no longer burning and glowing coals have formed. Adding firewood too early reduces the efficiency of the stove

- Choose equal-sized firewood for filling.
- Fill the hearth with firewood to a maximum of 2/3 of its height.
- **Figure 16** and **Figure 17** indicates the maximum number of firewood in kilograms for each filling procedure.
- Mix the coals with the fire poker before adding the firewood.
- Stack the firewood tightly to the hearth, as close to the back wall as possible.
- **Make sure the ash drawer is in the closed (fully pushed in) position.**
- Close the stove door.

If the second filling of the hearth is also necessary to reach the desired sauna temperature, repeat the same process.

ATTENTION! **The ash drawer should always remain closed (except during the ignition phase).**

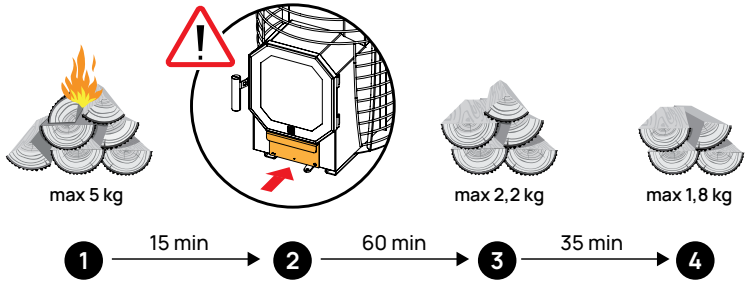

1. Start heating with the ash drawer open (3mm). Ignite the firewood on top.
2. Close the ash drawer no later than 15 minutes after igniting.
3. When the first batch is burnt, add firewood (max 2.2 kg).
4. If you need more heat, add firewood after the previous batch has burnt (max 1.8 kg).

Figure 16. Starting HIVE Flow heating and adding the batch of firewood.

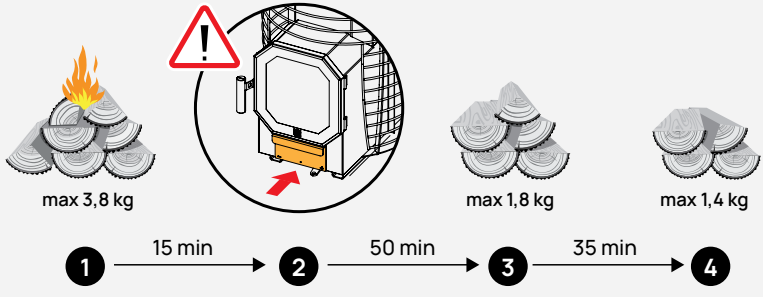

1. Start heating with the ash drawer open (3mm). Ignite the firewood on top.
2. Close the ash drawer no later than 15 minutes after igniting.
3. When the first batch is burnt, add firewood (max 1.8 kg).
4. If you need more heat, add firewood after the previous batch has burnt (max 1.4 kg).

Figure 17. Starting HIVE Flow Mini heating and adding the batch of firewood.

MAKING STEAM

As the sauna heats up, the air in the sauna room becomes dry. To achieve a pleasant humidity level and the best sauna experience, throw water on the hot stove stones.

- Start making steam only when the stones are properly hot and the water has completely evaporated from them.
- Too hard and iron-rich water changes the appearance of sauna stones. Do not use water containing salt or chlorine, as it causes corrosion of the body of the sauna stove.
- We recommend throwing about 80 ml of water on the stones at a time. If you want more steam, wait a few minutes and then pour the same amount again. This allows the stones to dry out and reheat in between.
- Aromatic liquids made of oil or any must substance should be diluted in steam water beforehand, otherwise these may catch fire in a hot sauna stove or on stones.
- Pour water evenly over the stones.

ATTENTION! **Never make steam when someone is in the immediate vicinity of the sauna stove, as the hot steam can cause burns.**

FINISHING THE HEATING

Due to the special nature of combustion, a lot of coal is generated in the hearth. Depending on the number of firewood logs added to the sauna stove, the layer of embers formed in the hearth can burn for a long time.

If you want the coals to burn faster at the end of heating:

- Mix the coals with a poker and pile them in the middle of the hearth.
- Open the ash drawer as much as possible. The ash drawer's safety limiter prevents the drawer from being opened more than 3mm. An inflow of air occurs through the ash grate and intensive burning of coal begins.

We recommend scheduling the sauna session in the same time period when the coals are burning in the hearth. This way, you will save fuel and have a better sauna experience. When the coals are finised burning, close the ash drawer and the air valve located under the stove door, so the stove stays warm longer.

MAINTENANCE

The stove properly heated with high-quality firewood does not create soot in the flues and does not require special maintenance. However, the chimney, connections of the flue pipes with the chimney and the flues of the sauna stove should be cleaned at least once a year. This work should be ordered as a service from a qualified chimney sweep. When cleaning the sauna stove, you should observe all local fire and safety regulations that stipulate the fire safety requirements for cleaning heating equipment (RTL 1998,195/196, 771 and RTL2000,99,1555).

The flues of the sauna stove are cleaned at least once a year. To do this, the upper stone layer should be removed from the stove so that access to the cleaning hatches is possible. If soot is visible inside the sauna stove, the flues should be swept. Every qualified chimney sweep has the appropriate equipment for this.

Also, check the condition of the stones in the sauna stove at least once a year. Replace any cracked or otherwise damaged stones with new ones. Depending on the intensity of sauna use, it is necessary to partially or completely replace the stones with new ones on average every two years. When the stones that have outlived their time, heating takes longer, which in turn puts more strain on the structure of the sauna stove, wastes heating material and reduces the quality of the steam.

Tutorial video

Clean the door glass regularly, preferably before each heating. Special fireplace glass cleaners sold in stores are suitable for cleaning. You can also use moistened kitchen paper towels. Dip the moistened paper towel in fine white ash in the hearth and scrub away the soot deposited on the door. Then clean and dry the glass with a clean paper.

Check the condition of the door seal every time you clean the glass. If the door seal is damaged or comes loose, the sauna stove should not be heated. Without a seal, the combustion process receives too much air and can cause overheating. The door seal can be replaced. You can order a suitable seal and glue as HUUM's spare parts. See **Appendix 4, page 29.**

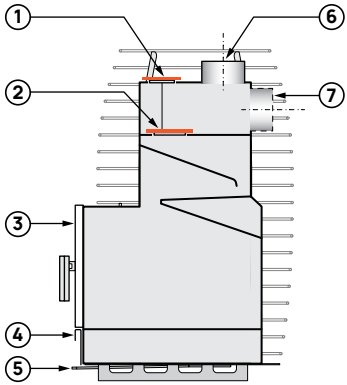

1. Upper cleaning hatch
2. Lower cleaning hatch
3. Hearth door
4. Ash drawer
5. Air valve
6. Chimney leg in case of top connection
7. Chimney leg in case of back connection

Figure 18. Details of HIVE Flow sauna stove.

REMOVAL FROM USE

HUUM sauna stoves are designed to last with the aim of leaving the smallest possible ecological footprint on the environment.

When the sauna stove has served its time, take it and the related parts to a designated collection point for disposal in accordance with local legal regulations.

General instructions for removal of the sauna stove from use:

1. Clean the hearth and flues of the sauna stove.
2. Disconnect the sauna stove from the chimney flues and close them.
3. Take the metal structures of the sauna stove to the designated collection point (e.g. designated metal recycling center).
4. Take the glass parts of the sauna stove to the designated collection point (e.g. designated waste center).

WARNINGS AND NOTES

The sauna stove is designed to heat the sauna room to the temperature of enjoying steam. It should not be used for any other purpose.

Do not heat the sauna stove if you do not have sufficient knowledge or if your state of health does not allow it to be done correctly.

Due to the large stone mass of the sauna stove, it takes time to reach the desired temperature in the sauna room. Allow for time for the sauna stove to reach optimal temperature according to the operation manual. If you try to rush the heating by ignoring the rules of use, it leads to overheating, damage to the sauna stove and flues, and the risk of fire. The properly heated sauna stove stores heat for a long time and creates mild steam.
The best sauna room temperature for enjoying steam is **60 - 80 °C.**

- Minors are not allowed to heat or use the sauna stove without adult supervision.
- Do not leave the sauna stove unattended in burning mode.
- The sauna stove can only be used when properly filled with stones.
- It is forbidden to cover the sauna stove, it causes a fire hazard.
- Do not touch the heated sauna stove, it will cause burns.
- The air valve and ash drawer become hot during heating. Use gloves or a fire poker to handle these.
- If the sauna stove overheats or other problems occur (e.g. soot fire in the flue), stop the burning process immediately. To do this, make sure that the ash drawer is closed and close the air valve at the edge under the sauna stove. If possible, limit the air supply to the sauna room. In case of a soot fire, be sure to have the chimney sweep clean the flue before the next use and check the condition of both the flue and the sauna stove.

- Avoid getting water on the hot door glass of the sauna stove! Tests have shown that the door glass of the sauna stove is durable, but the manufacturer's warranty does not apply to the glass. If the door glass is broken, order a replacement glass as a HUUM spare part. The list of spare parts **Appendix 4.**

  ATTENTION! **Heating the sauna stove with cracked glass is prohibited!**
- If the sauna stove has not been used for a long time, make sure that both the sauna stove and the flue are in good condition before heating.
- To clean the hearth and use it safely, stock up on handy hearth accessories for the sauna room (scoop, brush, poker). Store these in a lower temperature (up to 40 °C) part of the sauna room (e.g under the sauna bench).
- Changing or rebuilding the structure of the sauna stove is prohibited.

SOLVING PROBLEMS

The draft of the sauna stove is weak

- The sauna stove has not been used for a long time and the flue and stones are damp.
- The sauna stove does not get enough air or there is underpressure in the sauna due to ventilation. Underpressure can be caused, for example, by using a kitchen hood.
- The sauna stove has not been cleaned for a long time.
- Leakage in the connection pipe.

The sauna is not heating up properly

- Firewood is damp or too thick.
- The power of the sauna stove does not correspond to the cubic capacity of the room.
- The draft of the sauna stove or flue is weak.
- The sauna stones are dirty, crumbled. Inappropriate stones have been used.
- Structural and ventilation errors in the sauna.

The sauna stove creates an unpleasant odor

- Pre-installation heating has not been done (see **"Pre-installation heating"** on page 6)
- The sauna stones have not been washed before installation.
- Grease or dirt has accumulated on the stones.
- Steam water is not clean.

The sauna stove is overheating

- The ash drawer is open during heating.
- The chimney draft is too big.
- Firewood is too thin and/or dry.
- The amounts and intervals of batches are incorrect (see **Appendix 1, page 26**)

The oven glass is getting sooty

- Sooting of the glass during oven ignition is normal. It is caused by humidity in the air and cold surfaces where water condenses. When starting the heating, keep the door slightly open by a couple of millimeters for the first few minutes to allow the surfaces to dry, and then close the door completely.
- The wood used for heating is too moist. If possible, store/dry the wood indoors.

A flame shoots out when opening the door of the stove.

- Do not open the stove door during the intense burning phase. If it is necessary for some reason, first open the door a few millimetres for 10 seconds. Then you can open the door as much as necessary.

WARRANTY

General terms and conditions can be found on our webpage: huum.eu/warranty

Find the most up-to-date material on the manufacturer's website: huum.eu

APPENDIX 1

TECHNICAL DATA OF THE SAUNA STOVE

	Flow	Flow LS	Flow Mini	Flow Mini LS
Size of the sauna room m^3	8..18	8..18	6..14	6..14
Height from the floor mm	884	884	884	884
Width mm	526	526	450	450
Depth (without handle) mm	586	706	493	613
Chimney leg diameter mm	114	114	114	114
Chimney temperature class	T450	T450	T450	T450
Minimum cross-section of the chimney mm^2	10 400	10 400	10 400	10 400
Weight without stones kg	67	73	54	59
Weight of heating stones kg	150	150	105	105
Stone size mm	50..150	50..150	50..150	50..150
Fuel	firewood	firewood	firewood	firewood
Maximum length of firewood mm	400	400	300	300
Recommended length of firewood mm	300	300	300	300
Ignition quantity maximum kg	5	5	3,8	3,8
Minimum burning time of the ignition quantity in minutes	75	75	65	65
First reheating quantity maximum kg	2,2	2,2	1,8	1,8
Minimum burning time of the first reheating quantity in minutes	35	35	35	35
Second reheating quantity maximum kg	1,8	1,8	1,4	1,4
Maximum fuel quantity per hour kg/h	4	4	3,5	3,5
Nominal heating capacity KW	9,8	9,8	8,5	8,5
Gross efficiency %	74,9	74,9	75,1	75,1
Average flue gas temperature at nominal heating capacity °C	339	339	319	319
Maximum flue gas temperature at nominal heating capacity °C	385	385	343	343
CO (13% O_2) mg/m^3	346	346	686	686
PM (13% O_2) mg/m^3	17	17	14	14
NO_X (13% O_2) mg/m^3	68	68	81	81
OGC (13% O_2) mg/m^3	34	34	51	51
Flue gas mass flow g/s	8,6	8,6	7,9	7,9

ENG

APPENDIX 2

DECLARATION OF HIVE FLOW PERFORMANCE

EN 15821:2010 Wood-burning sauna stoves with reheating for heating rooms in residential buildings. • Sauna stove HIVE Flow • HIVE Flow LS **BImSchV Stufe 2 01/26/2010 DIN EN 13240 ECODESIGN 2022 2015/1185**		CE **HUUM OÜ** Vahi tee 9 60534 Vahi küla Tartumaa Estonia
Fire safety		Compliant with requirements
Safety distances	Back (mm)	150
	Side (mm)	150
	Above (mm)	1000
Emission of combustion products		Compliant with requirements
Surface temperature		Compliant with requirements
Release of hazardous substances		NPD
Cleanability		Compliant with requirements
Flue gas temperature		339 °C
Mechanical strength		Compliant with requirements
Heating capacity and energy efficiency		
CO (13% O_2)		346 mg/m^3
PM (13% O_2)		17 mg/m^3
NO_X (13% O_2)		68 mg/m^3
OGC (13% O_2)		34 mg/m^3
Overall efficiency		74,9 %
Flue draught		12 Pa
Heating capacity		9,8 kW
Additional heating quantities		5 kg+2.2 kg+1.8 kg
Duration of use		Compliant with requirements

APPENDIX 3

DECLARATION OF HIVE FLOW MINI PERFORMANCE

EN 15821:2010 Wood-burning sauna stoves with reheating for heating rooms in residential buildings. • Sauna stove HIVE Flow Mini • HIVE Flow Mini LS **BImSchV Stufe 2 01/26/2010 DIN EN 13240** **ECODESIGN 2022 2015/1185**		CE **HUUM OÜ** Vahi tee 9 60534 Vahi küla Tartumaa Estonia
Fire safety		Compliant with requirements
Safety distances	Back (mm)	150
	Side (mm)	150
	Above (mm)	1000
Emission of combustion products		Compliant with requirements
Surface temperature		Compliant with requirements
Release of hazardous substances		NPD
Cleanability		Compliant with requirements
Flue gas temperature		319 °C
Mechanical strength		Compliant with requirements
Heating capacity and energy efficiency		
CO (13% O_2)		686 mg/m³
PM (13% O_2)		14 mg/m³
NO_x (13% O_2)		81 mg/m³
OGC (13% O_2)		51 mg/m³
Overall efficiency		75,1 %
Flue draught		12 Pa
Heating capacity		8,5 kW
Additional heating quantities		3.8 kg+1.8 kg+1.4 kg
Duration of use		Compliant with requirements

ENG

APPENDIX 4

SPARE PARTS

Code	Model	Name	Figure
SP0092	for All Flow models	Ashgrate	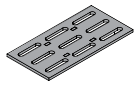
SP0093	for All Flow models	Cleaning hatch	
SP0094	for All Flow models	Wooden parts of the door handle including screws	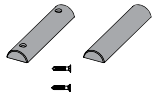
SP0095	Flow	Ashdrawer	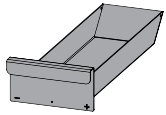
SP0096	Flow LS		
SP0097	Flow Mini		
SP0098	Flow Mini LS		
SP0099	Flow/Flow LS	Exterior glass of the door	
SP0100	Flow Mini / Flow Mini LS		
SP0101	Flow / Flow LS	Interior glass of the door with inner glass seal	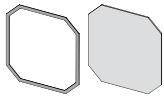
SP0102	Flow Mini / Flow Mini LS		
SP0103	for All Flow models	Door seal with adhesive	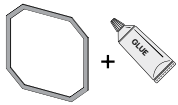
SP0106	for All Flow models	Adhesive for attaching the door seal	
SP0107	for All Flow models	Door fixator bushing with mounting bolt	

APPENDIX 5

ACCESSORIES

Code	Name/model	Figure
H3017011	Floor protection plate For all HIVE Flow models	
H3016021	Stainless steel Mounting collar for HIVE Flow LS	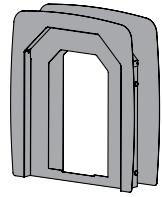
H3016031	Black Mounting collar for HIVE Flow LS	
H3018021	Stainless steel Mounting collar for HIVE Flow Mini LS	
H3018031	Black Mounting collar for HIVE Flow Mini LS	
H3016011	Protective bedding for HIVE Flow LS	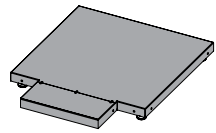
H3018011	Protective bedding for HIVE Flow Mini LS	
H3009011	Protective bedding for HIVE Flow	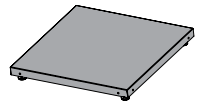
H3008011	Protective bedding for HIVE Flow Mini	
H3099021	Sauna stones Ø 5-10cm	
H3009041	Stone cage for all HIVE Flow models. Capacity: 35–40 kg of sauna rocks	