Cube Luxury Series CL4G Outdoor Sauna

50D" x 81W" x 83H"

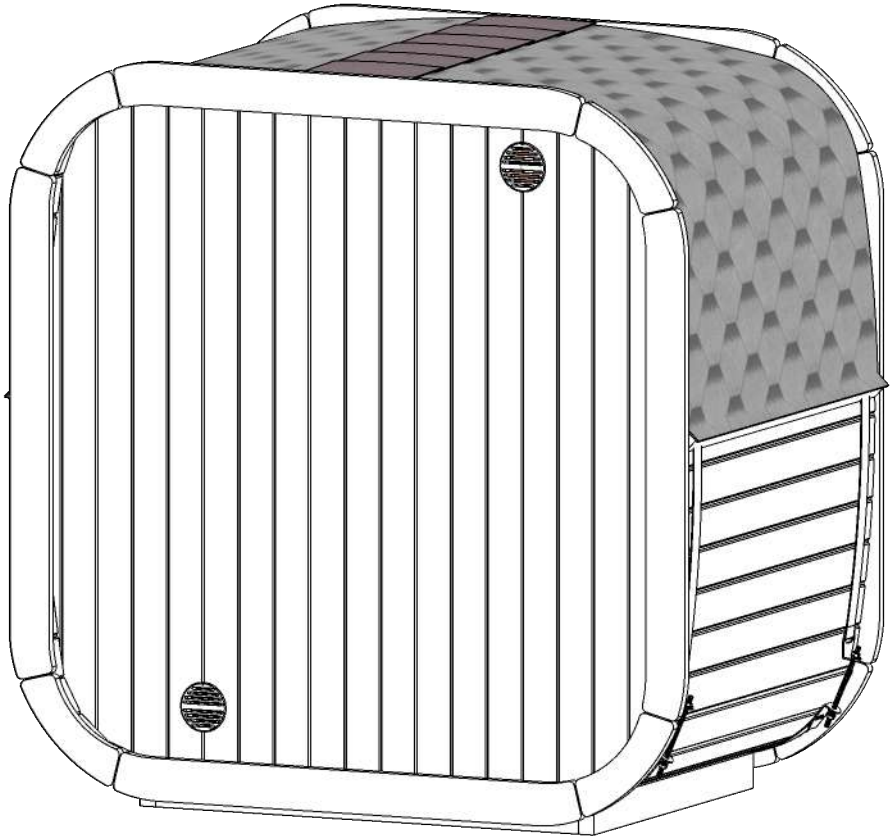

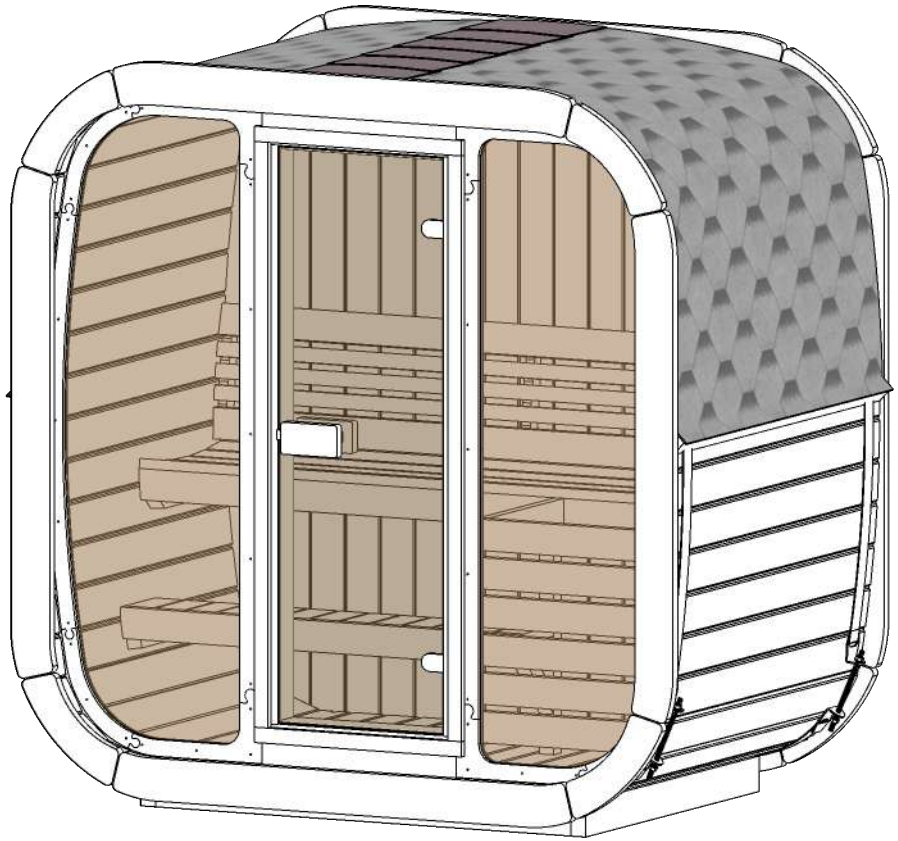

Note: Please read manual before construction

Rev: 1.0_6/2024

Cube Luxury Series CL4G Outdoor Sauna
50D" x 81W" x 83H"

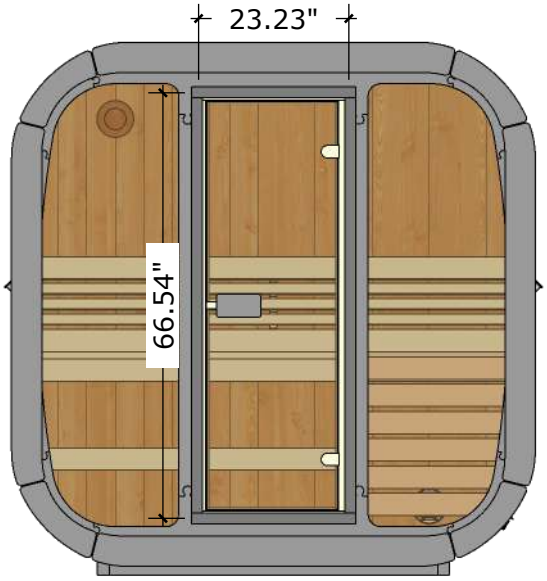

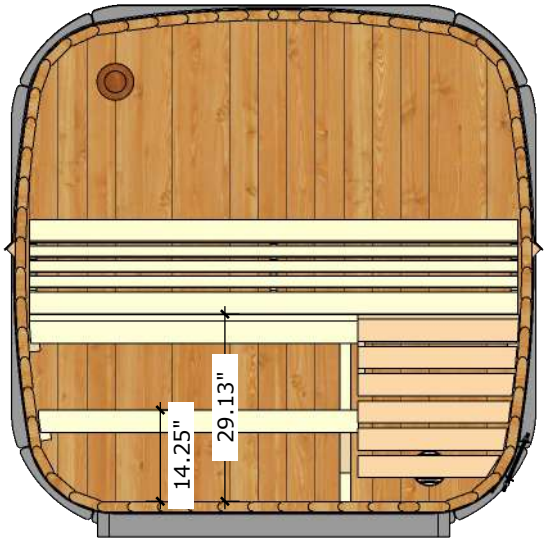

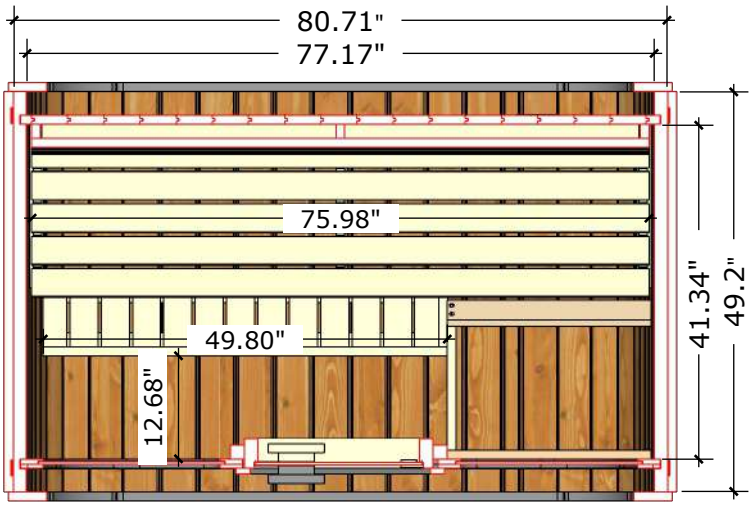

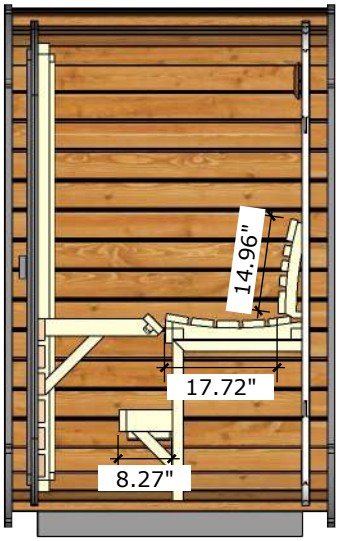

Rev: 1.0-6/2024

Tools needed

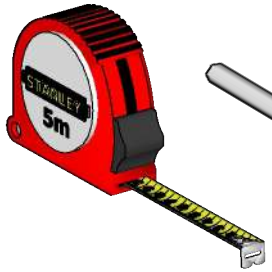

Measuring tape

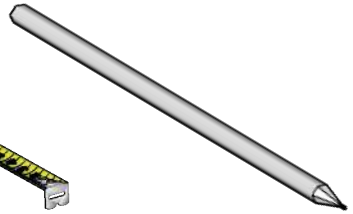

Marker pen

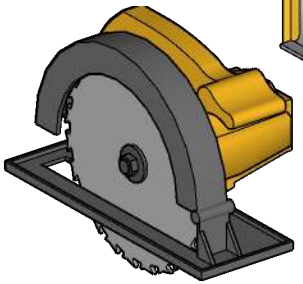

Circular saw

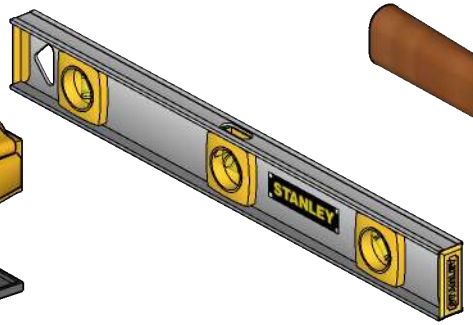

Water level

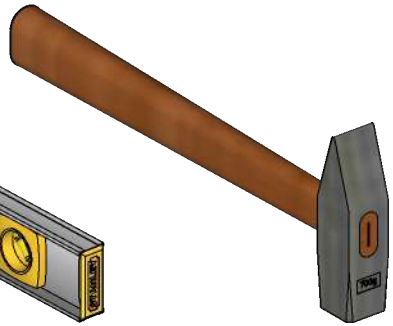

Hammer

Extra hands

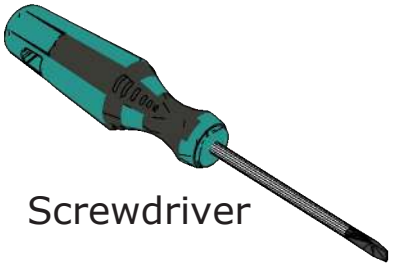

Screwdriver

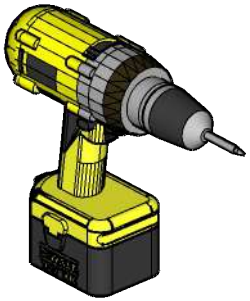

Drill

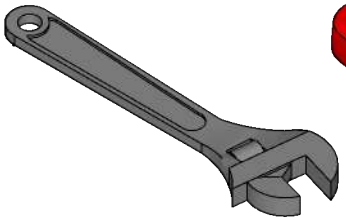

Cresent wrench

Utility knife

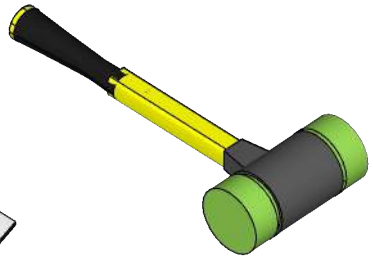

Rubber mallet

Ratchet strap

DET 1 ***Article.*** *K-SM100/1050*	**x2**	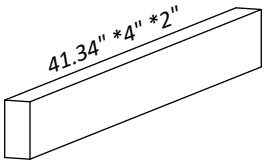	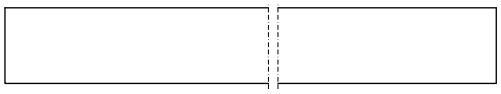
DET 2 ***Article.*** *K-SM100/1300*	**x3**	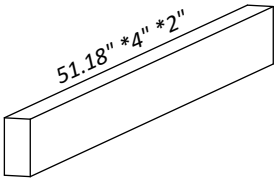	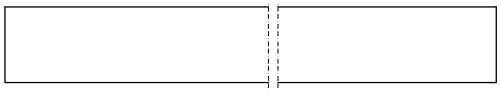
DET 3 ***Article.*** *T-STL117/1250XLM01*	**x1**	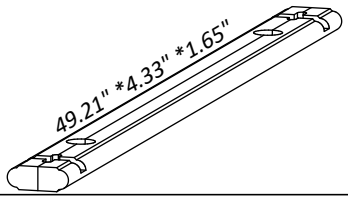	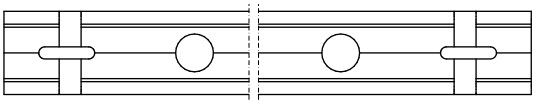
DET W ***Article.*** *MU-TRAPP*	**x2** kmpl	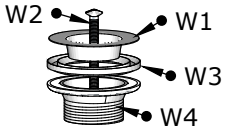	
DET 3 ***Article.*** *T-STL117/1250-01*	**x64**	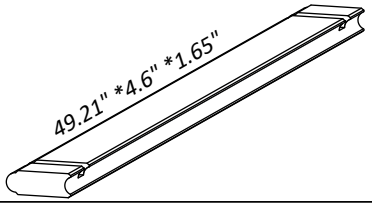	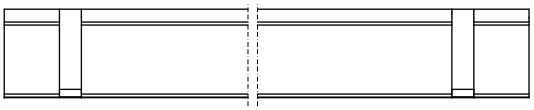
DET 3/H ***Article.*** *T-STL117/1250-01X*	**x2**	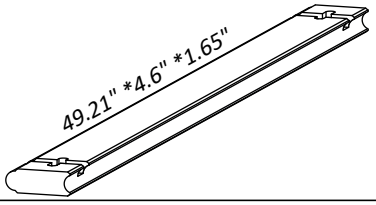	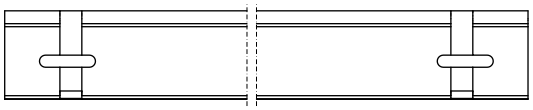
DET Sb ***Article.*** *IC-TE-20-PR-12/15V*	**x1**	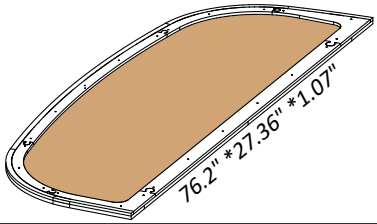	
DET Sa ***Article.*** *IC-TE-20-PR-12/15P*	**x1**	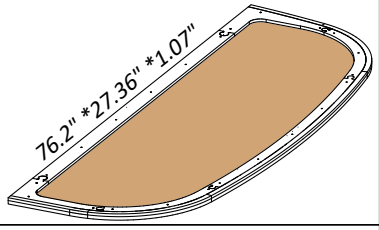	
DET Ta ***Article.*** *T-SL117/610UK1*	**x1**	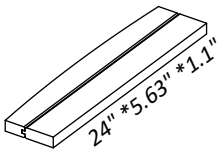	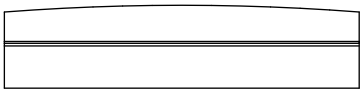
DET Tb ***Article.*** *T-TL94/610J*	**x1**	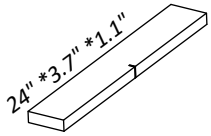	

DET V ***Article.*** *KI-VIN-25/40/40-ZN*	**x4**	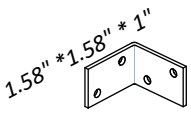	
DET U1 ***Article.*** *K-TL94/1940*	**x1**	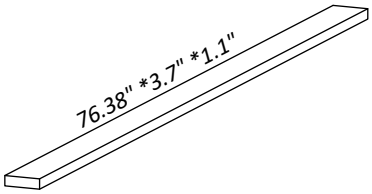	
DET Y1 ***Article.*** *T-IC-PTS-20/28-V*	**x1**	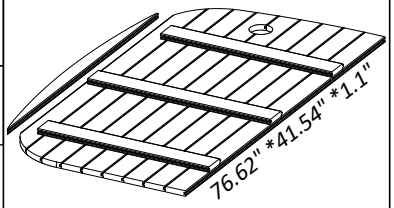	
DET Y2 ***Article.*** *T-IC-PTS-20/28-P*	**x1**	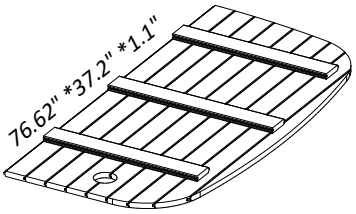	
DET U2 ***Article.*** *K-TL94/1850*	**x1**	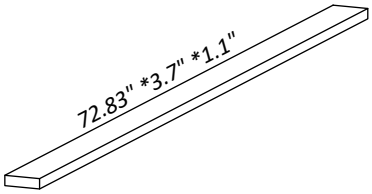	
DET 6 ***Article.*** *T-STL117/1250XL-01*	**x2**	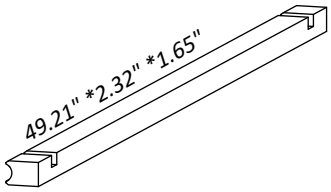	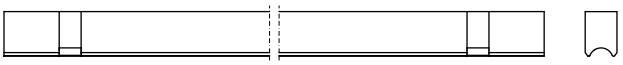
DET 6c/d/e/f ***Article.*** *T-STL117/1250KO-01*	**x1**	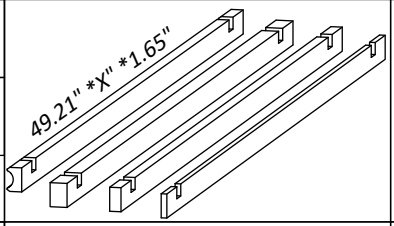	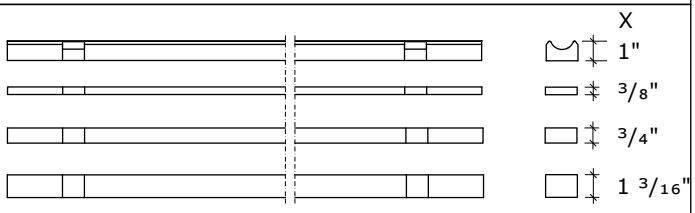
DET A1 ***Article.*** *MU-VIT1840-KLZN*	**x2**	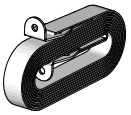	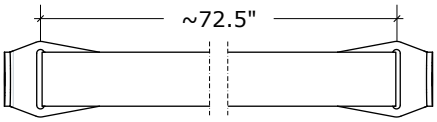
DET A2 ***Article.*** *MU-VIT4860-KLZN*	**x2**	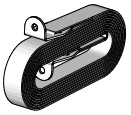	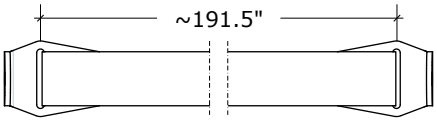
DET G ***Article.*** *MU-VENT-100-PU*	**x1**		

DET F ***Article.*** *MU-VENT-100-ZN*	**x3**		
DET 10a ***Article.*** *K-HP44/510XP*	**x2**	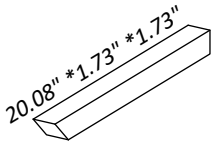	
DET 10c ***Article.*** *K-HP44/170*	**x1**	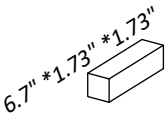	
DET 10 ***Article.*** *TL-LAMOD-1930-KA01*	**x1**	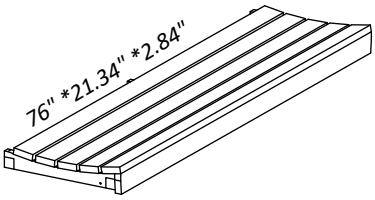	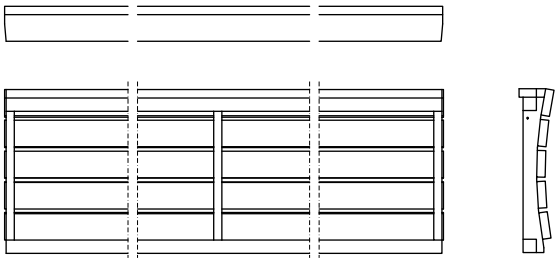
DET 10b ***Article.*** *K-HP44/652*	**x1**	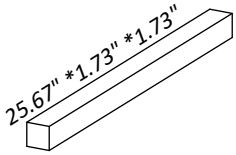	
DET 12 ***Article.*** *TL-LAMOD-1250-01*	**x1**	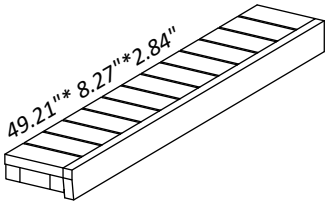	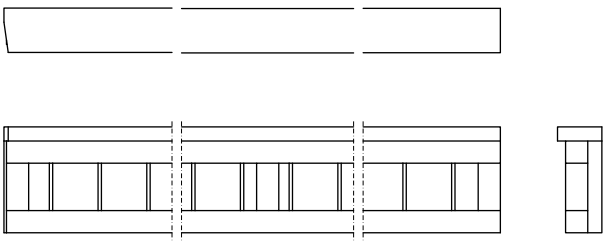
DET 12a ***Article.*** *K-HP44/250XP-XP*	**x1**	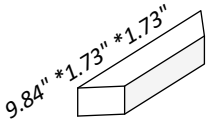	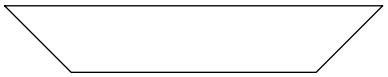
DET 14 ***Article.*** *TL-STMOD-1930-KA01*	**x1**	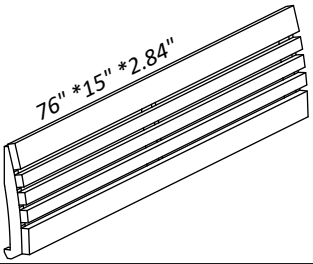	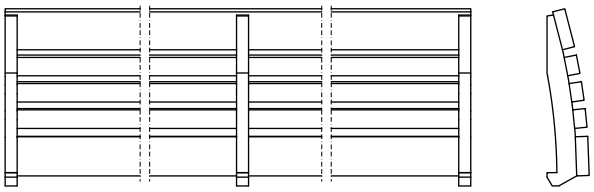
DET 21 ***Article.*** *U-KL-6/17-PR*	**x1**	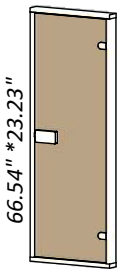	

DET 21c ***Article.*** *K-HP44/1690*	**x2**	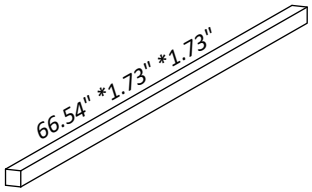	
DET 21d ***Article.*** *K-HP44/680*	**x2**	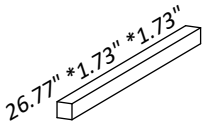	
DET 21a ***Article.*** *K-HL44/1660*	**x2**	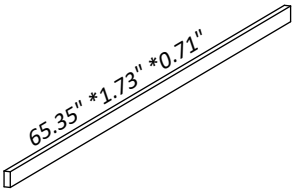	
DET 21b ***Article.*** *K-HL44/650*	**x2**	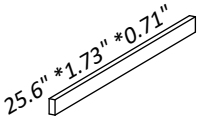	
DET 16 ***Article.*** *TL-PIMOD-632-01*	**x1**	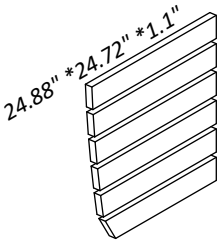	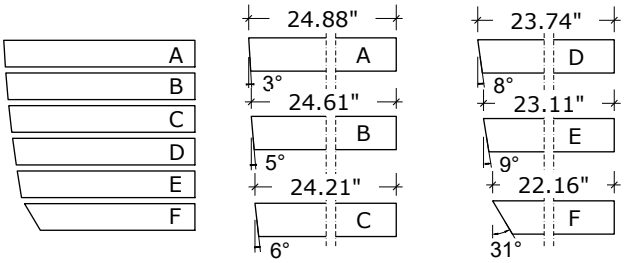
DET 15 ***Article.*** *TL-LAV90/475*	**x1**	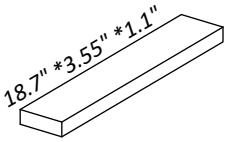	
DET 22 ***Article.*** *T-STL-1250-XX*	**x2**	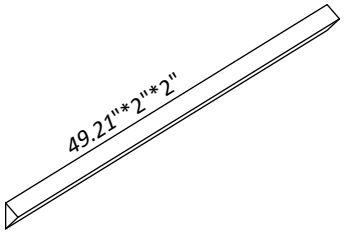	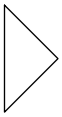
Underlay felt ***Article.*** *KAT-AL*	**26´**	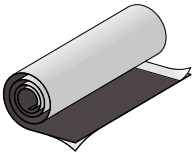	
DET N ***Article.*** *KAT-HAR-MUST*	**x5**	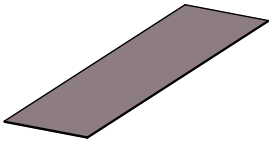	
DET O ***Article.*** *KAT-SIN-MUST*	**x42**	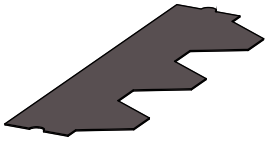	

DET 25a ***Article.*** *MU-OL-IC-20-1*	**x8**	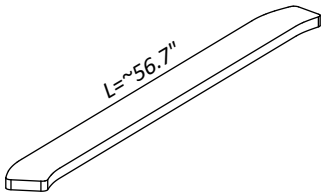	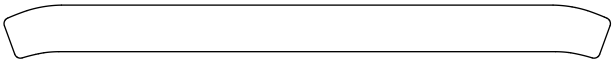
DET 25b ***Article.*** *MU-OL-IC-20-2*	**x8**	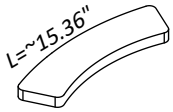	

Article.
KI-KERL-12-RV4

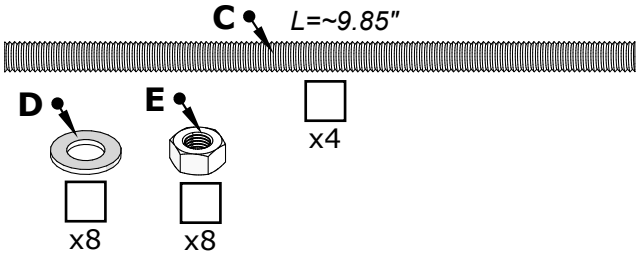

Article.
KI-USA-ICO-226

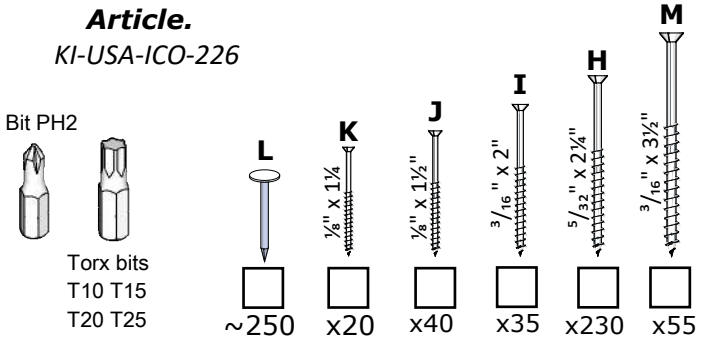

CL4G Outdoor Sauna 50D" x 81W" x 83H"

Exterior

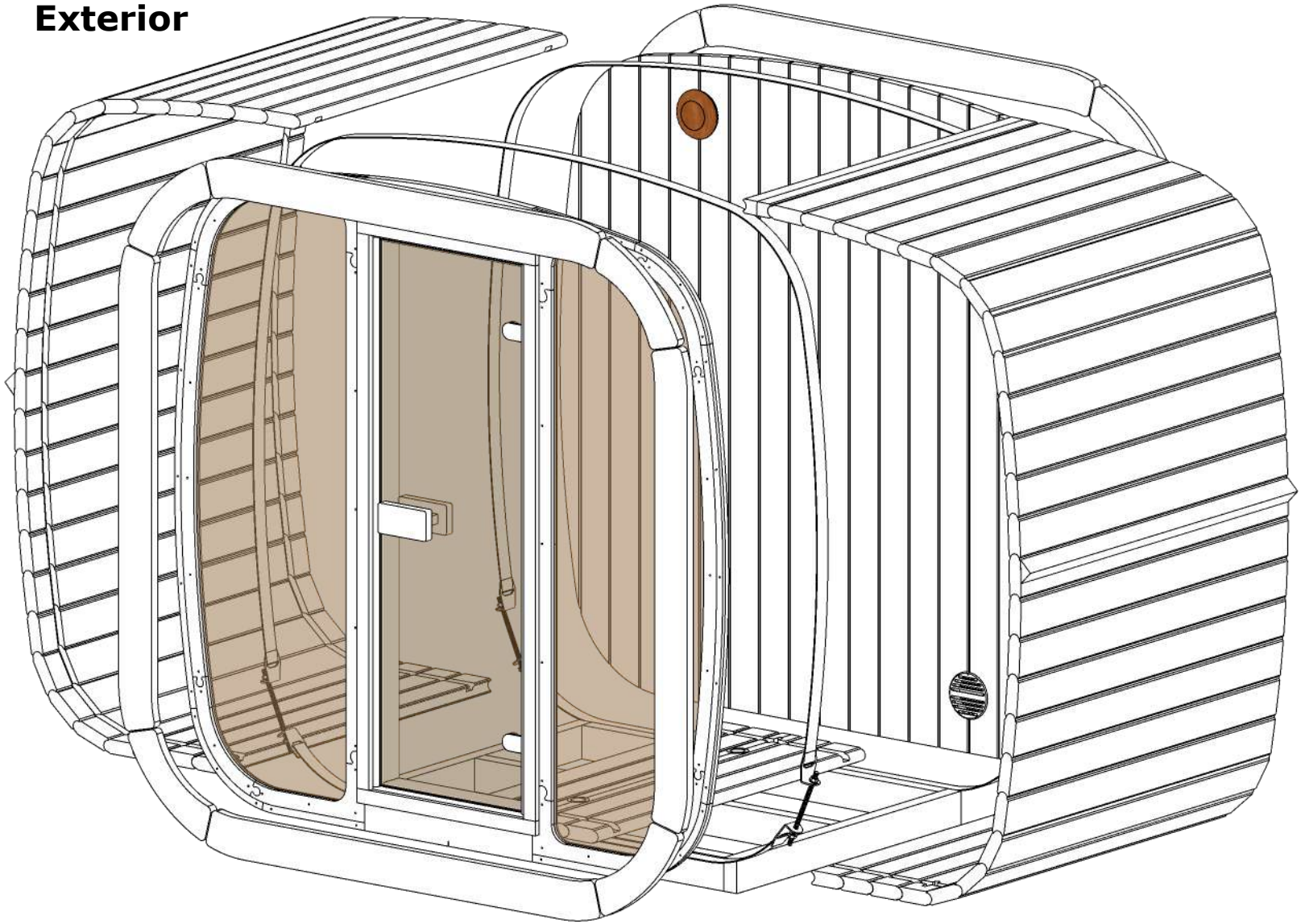

1.

CL4G Outdoor Sauna 50D" x 81W" x 83H"

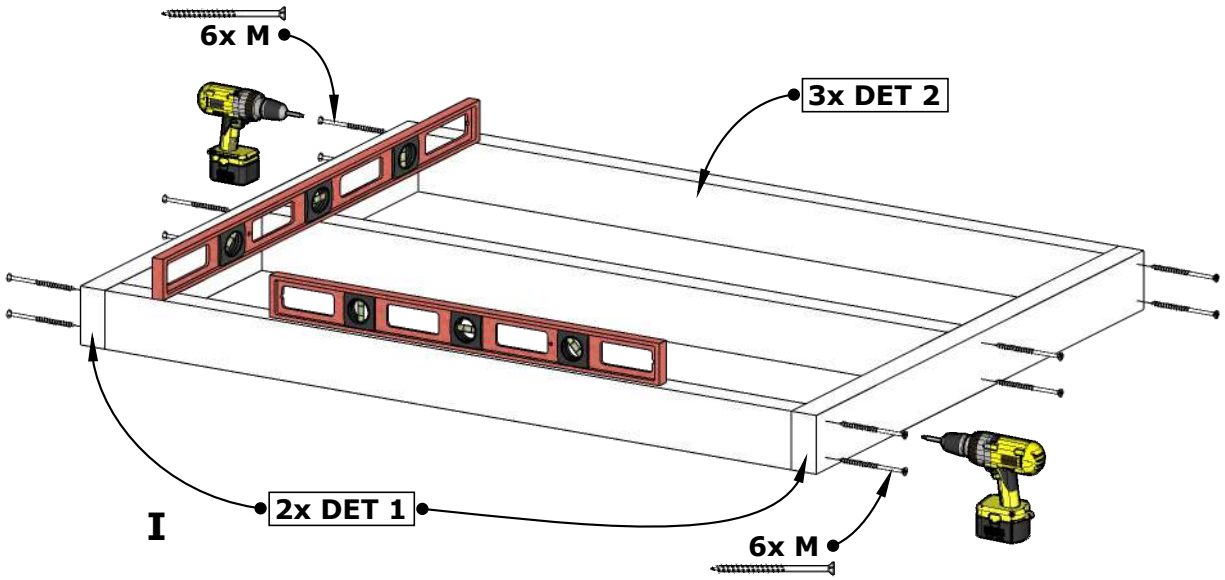

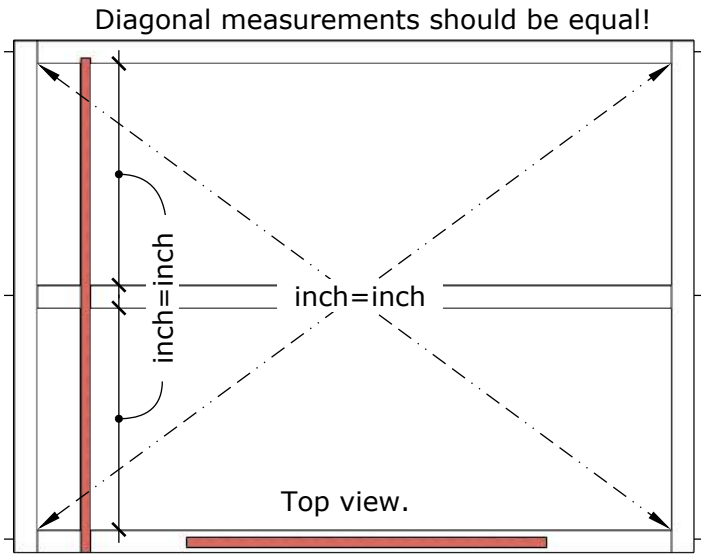

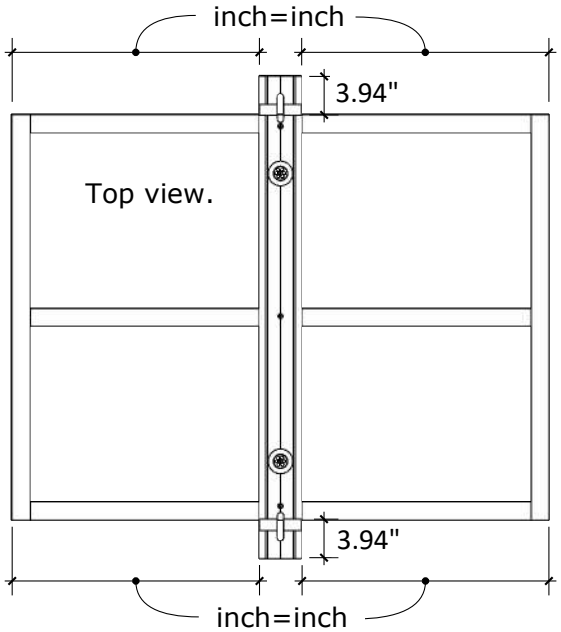

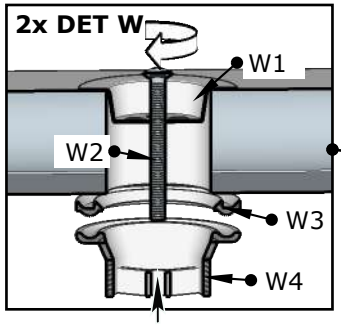

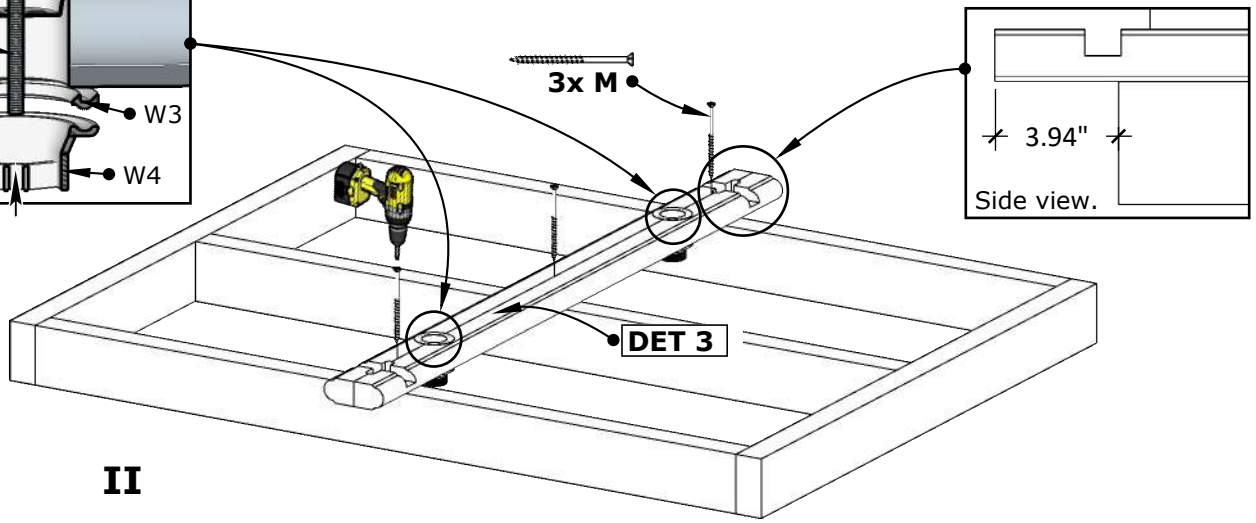

2.

CL4G Outdoor Sauna 50D" x 81W" x 83H"

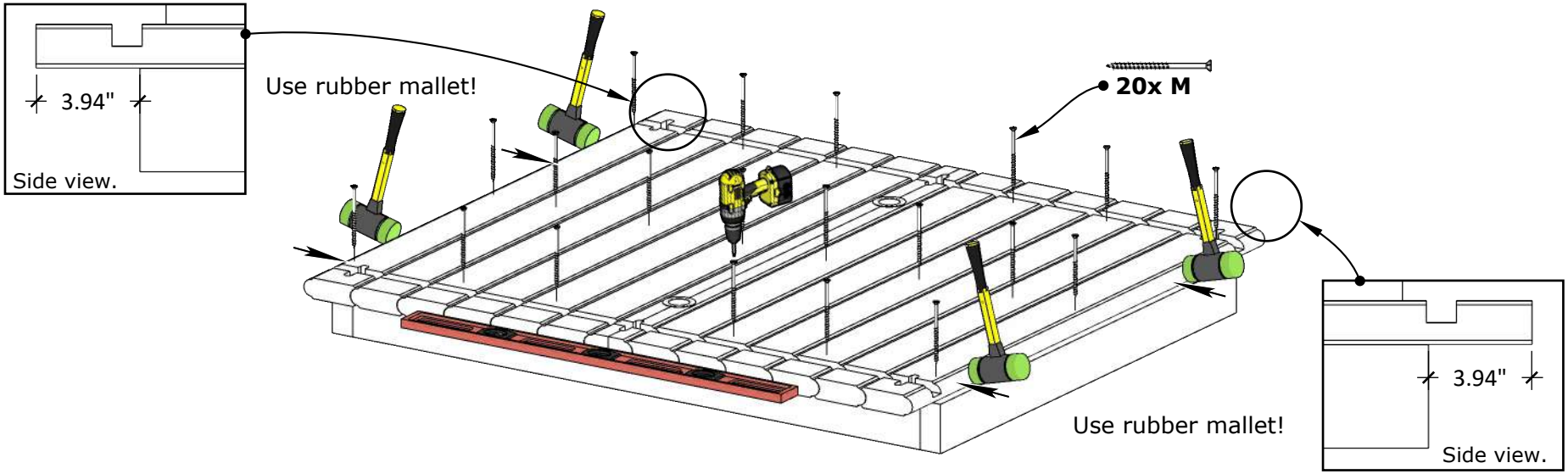

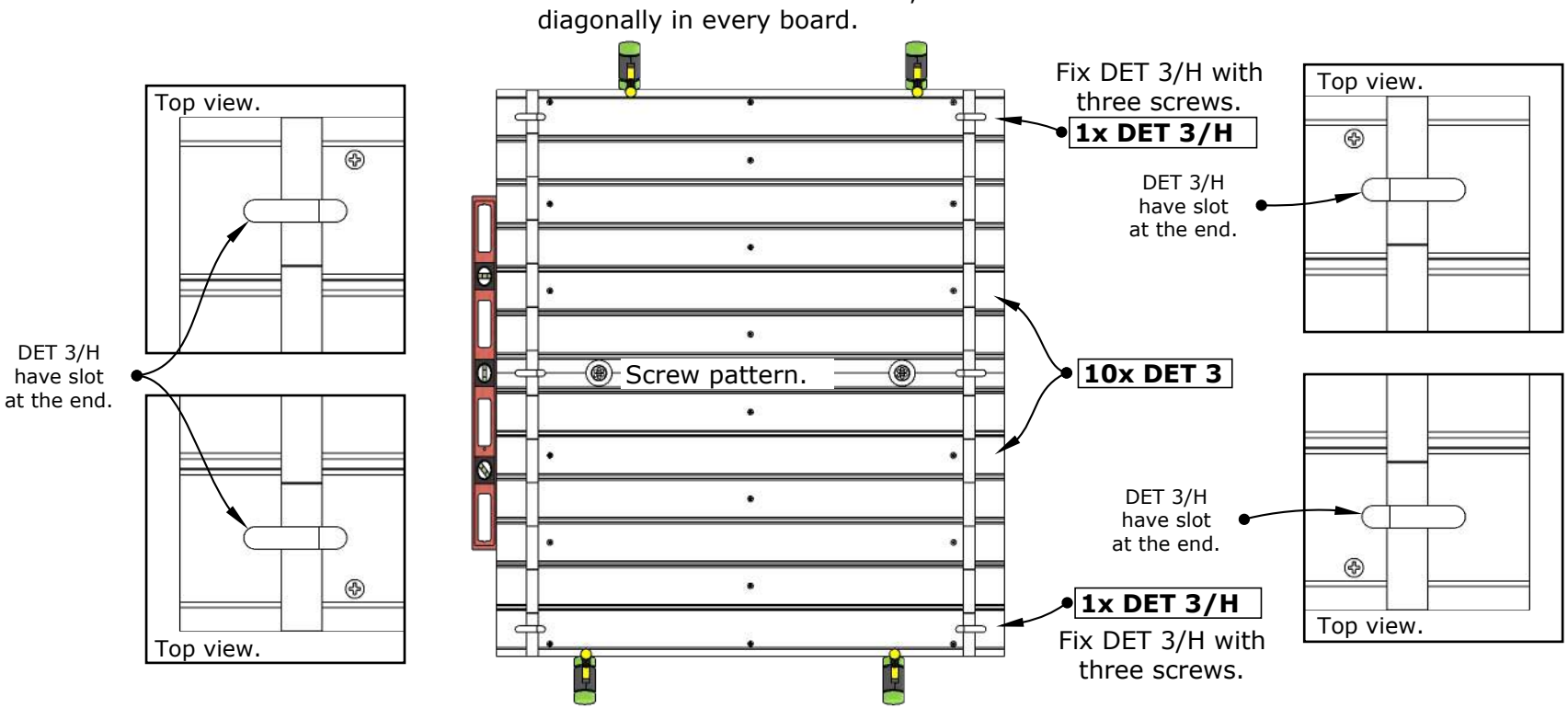

3.

CL4G Outdoor Sauna 50D" x 81W" x 83H"

Front glass-wall assembly

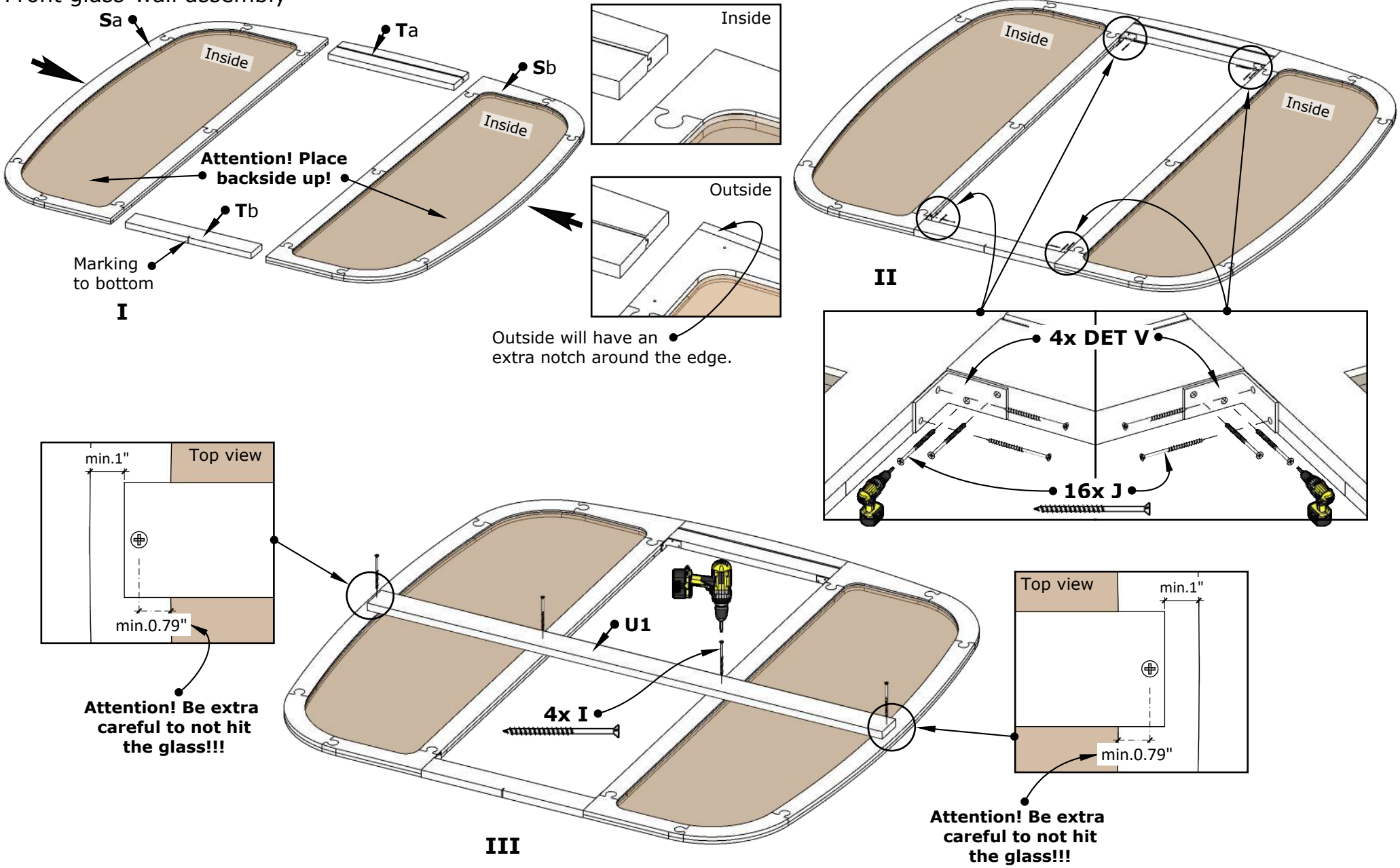

CL4G Outdoor Sauna 50D" x 81W" x 83H"

Wooden back wall assembly

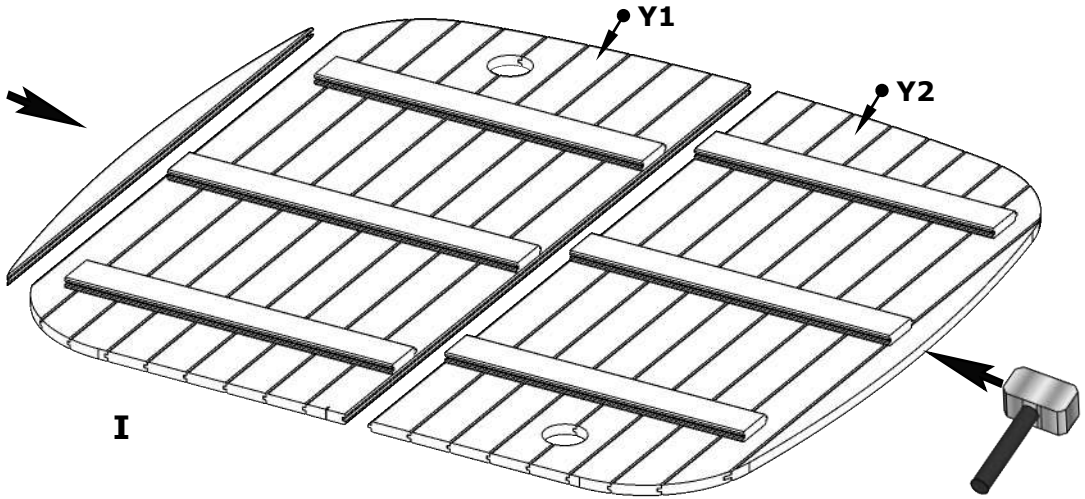

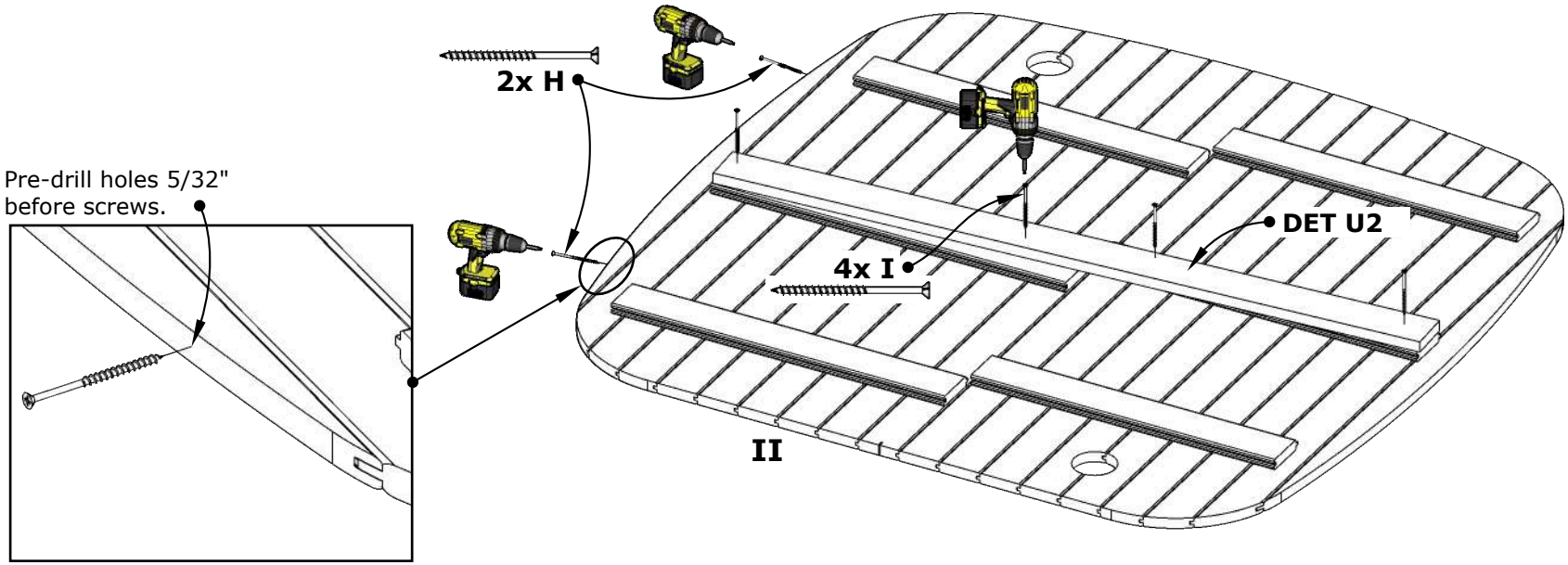

5.

CL4G Outdoor Sauna 50D" x 81W" x 83H"

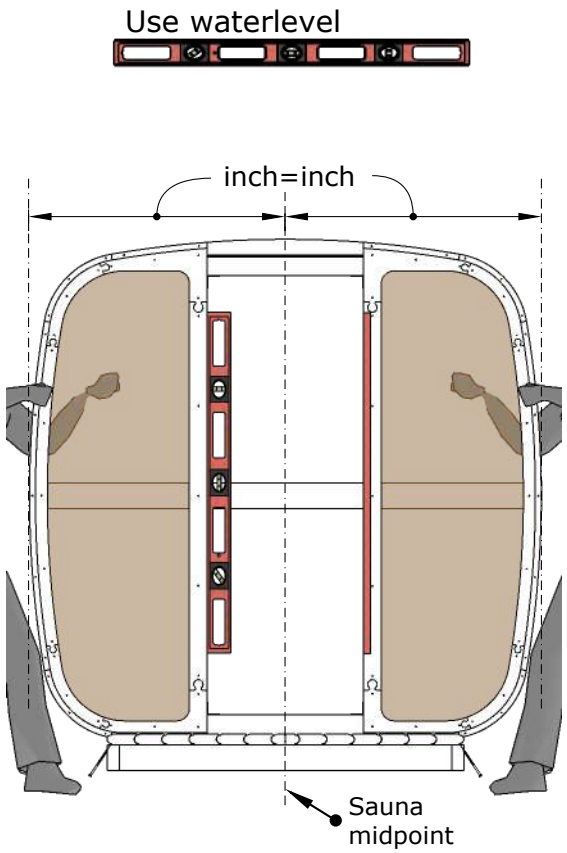

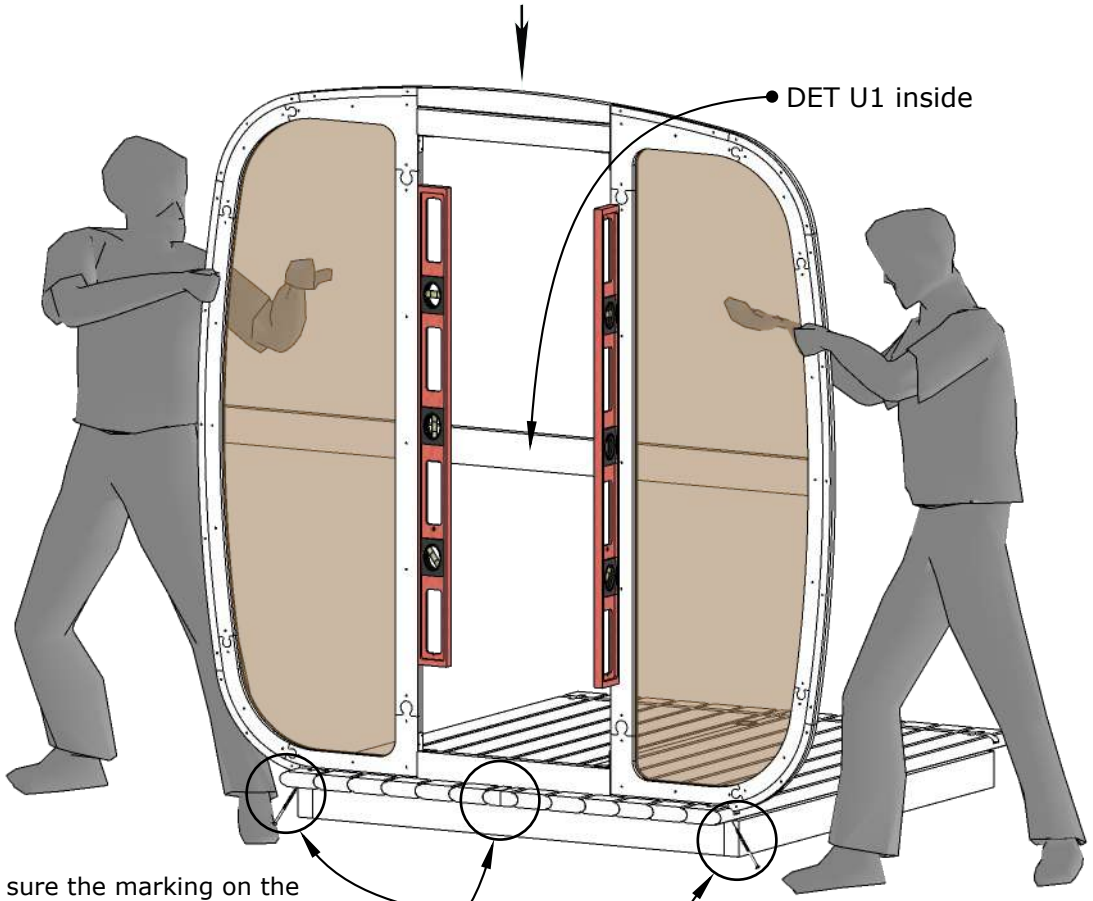

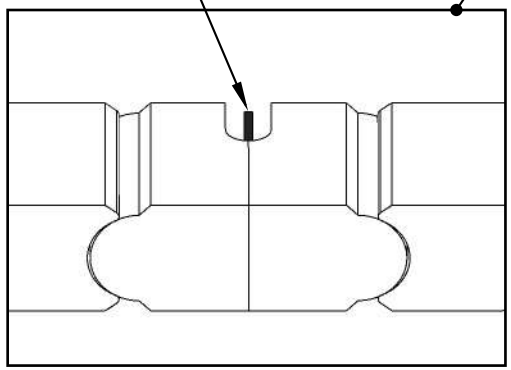

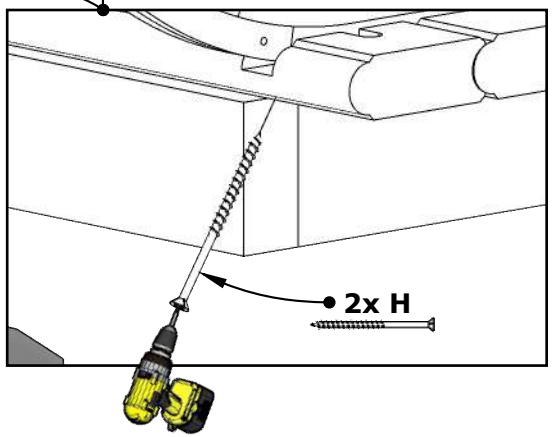

CL4G Outdoor Sauna 50D" x 81W" x 83H"

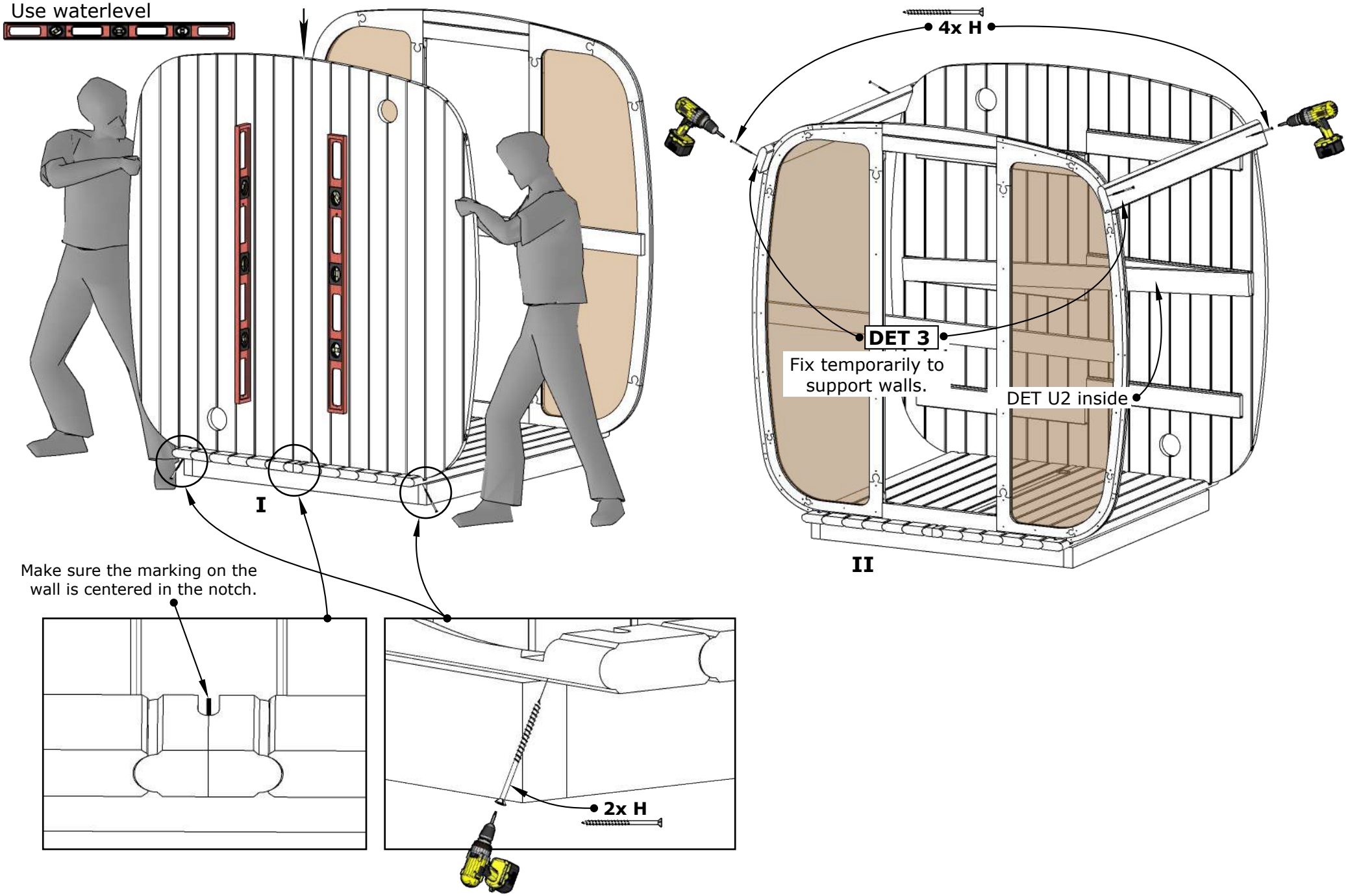

7.

CL4G Outdoor Sauna 50D" x 81W" x 83H"

Remove DET 3 from their temporary positions and use during the next step.

Use rubber mallet!

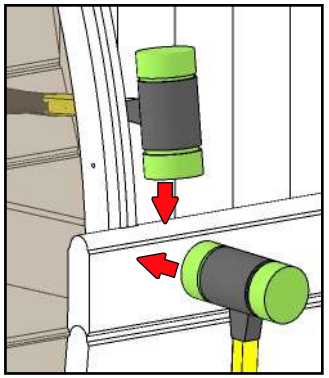

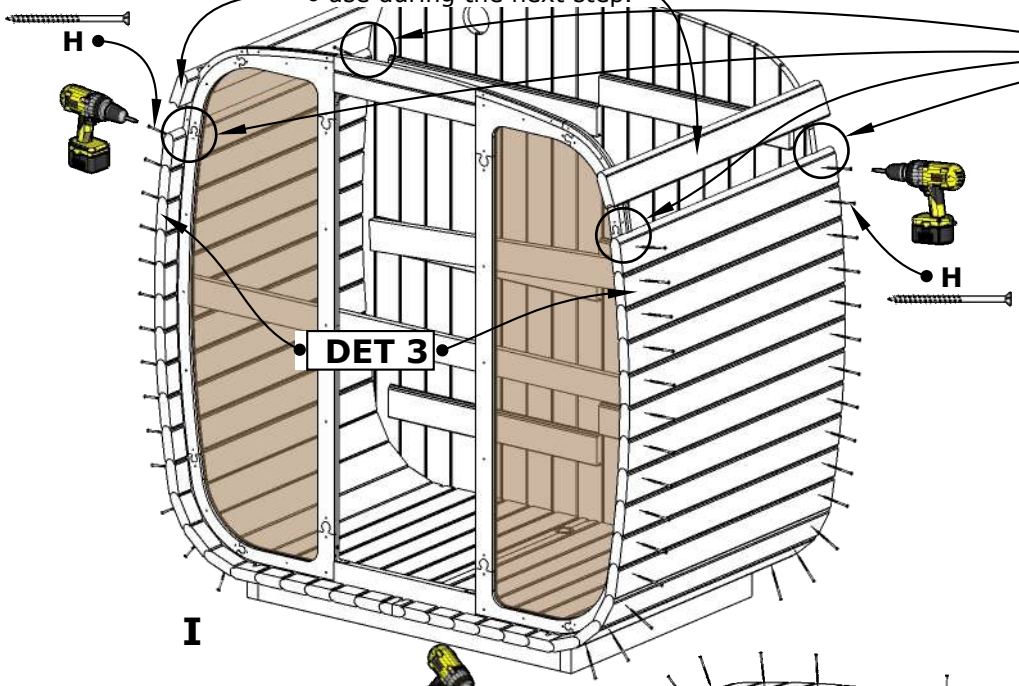

I

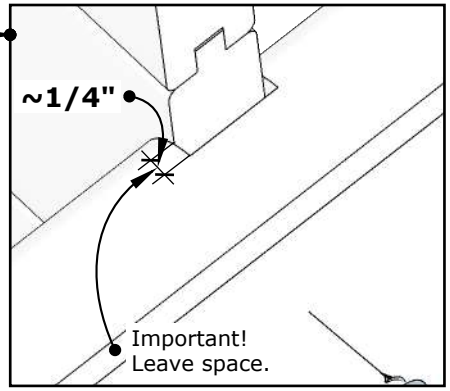

IMPORTANT! Be sure to leave a 1/4" gap when tightening screws to leave room for adjustment when the outer bands (A2) are installed.

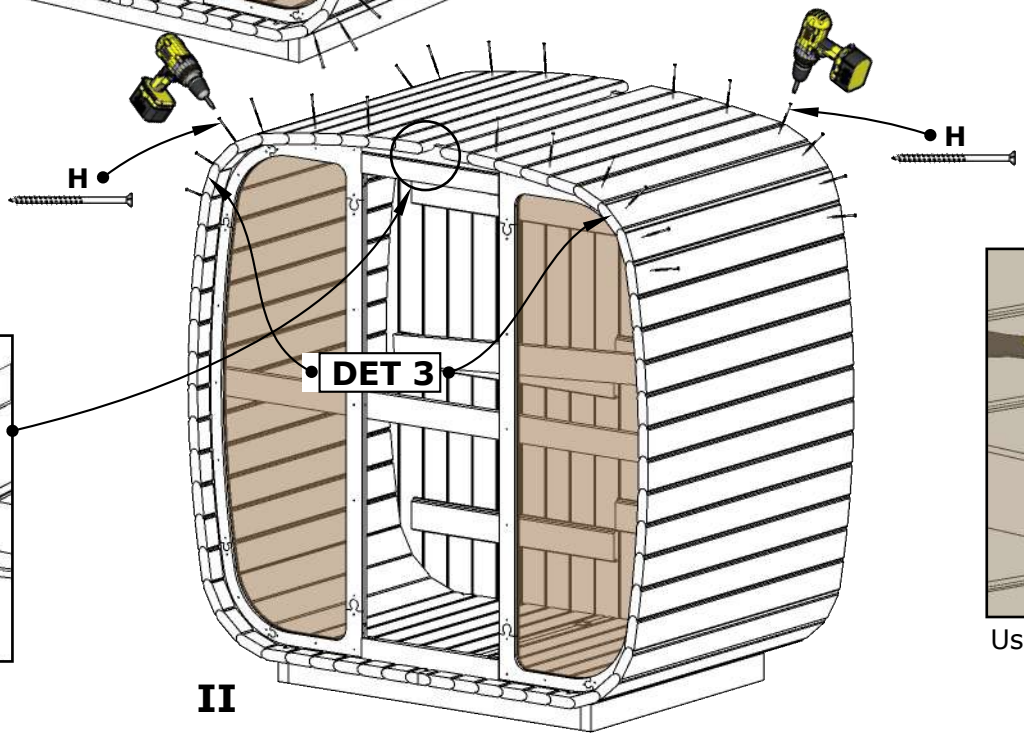

II

See the next page.

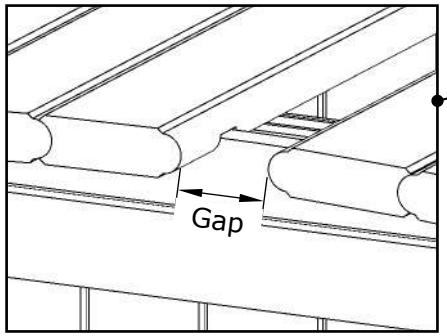

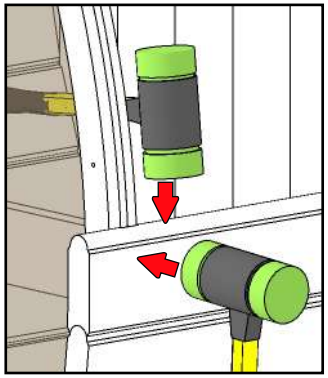

Use rubber mallet!

CL4G Outdoor Sauna 50D" x 81W" x 83H"

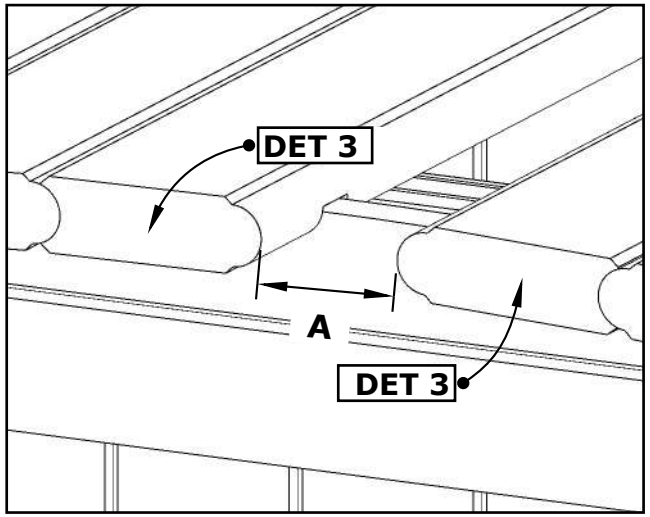

I

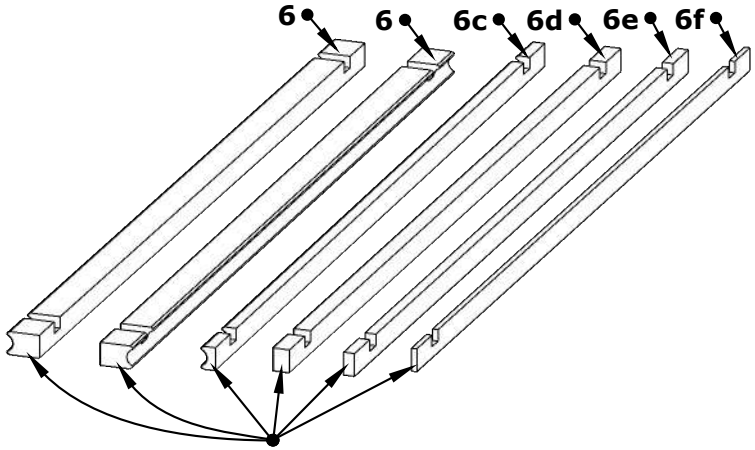

Join boards together (as shown in diagram III) that will bridge the width of the "A" gap. It is recommended that the combined boards are approximately 1/4" wider than the gap.

II

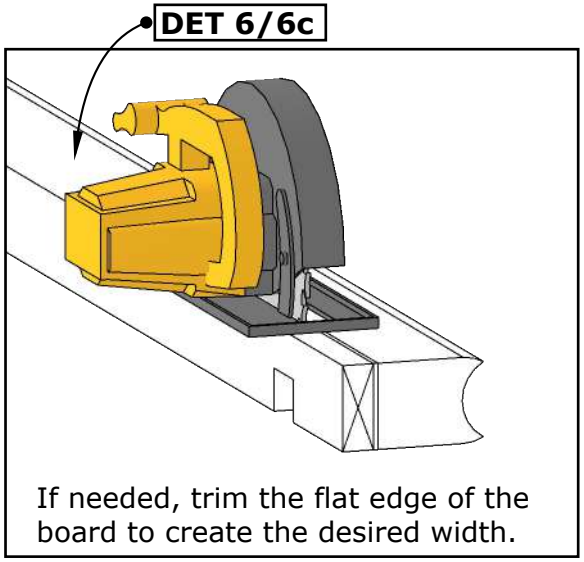

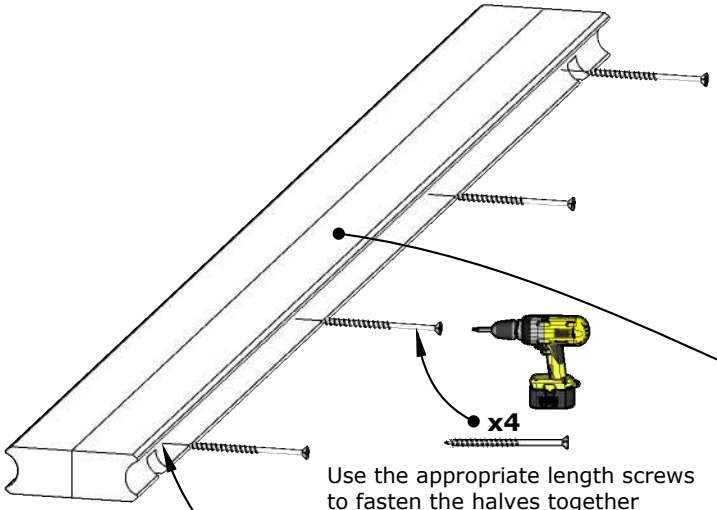

Use the appropriate length screws to fasten the halves together as shown in the diagram.

Pre-drill holes Ø 5/32"

III

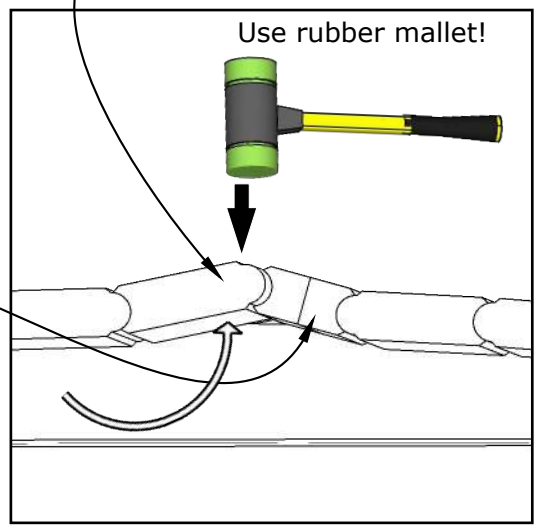

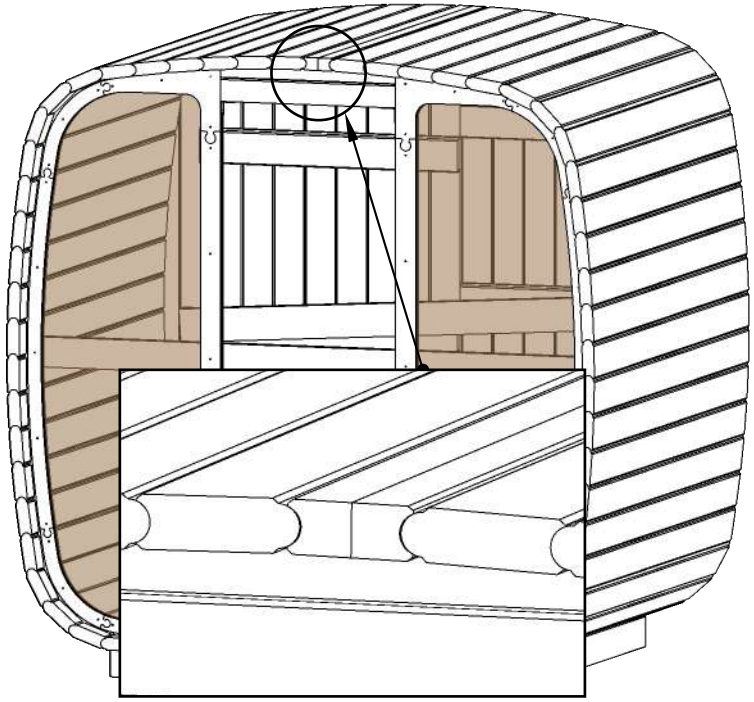

IV

CL4G Outdoor Sauna 50D" x 81W" x 83H"

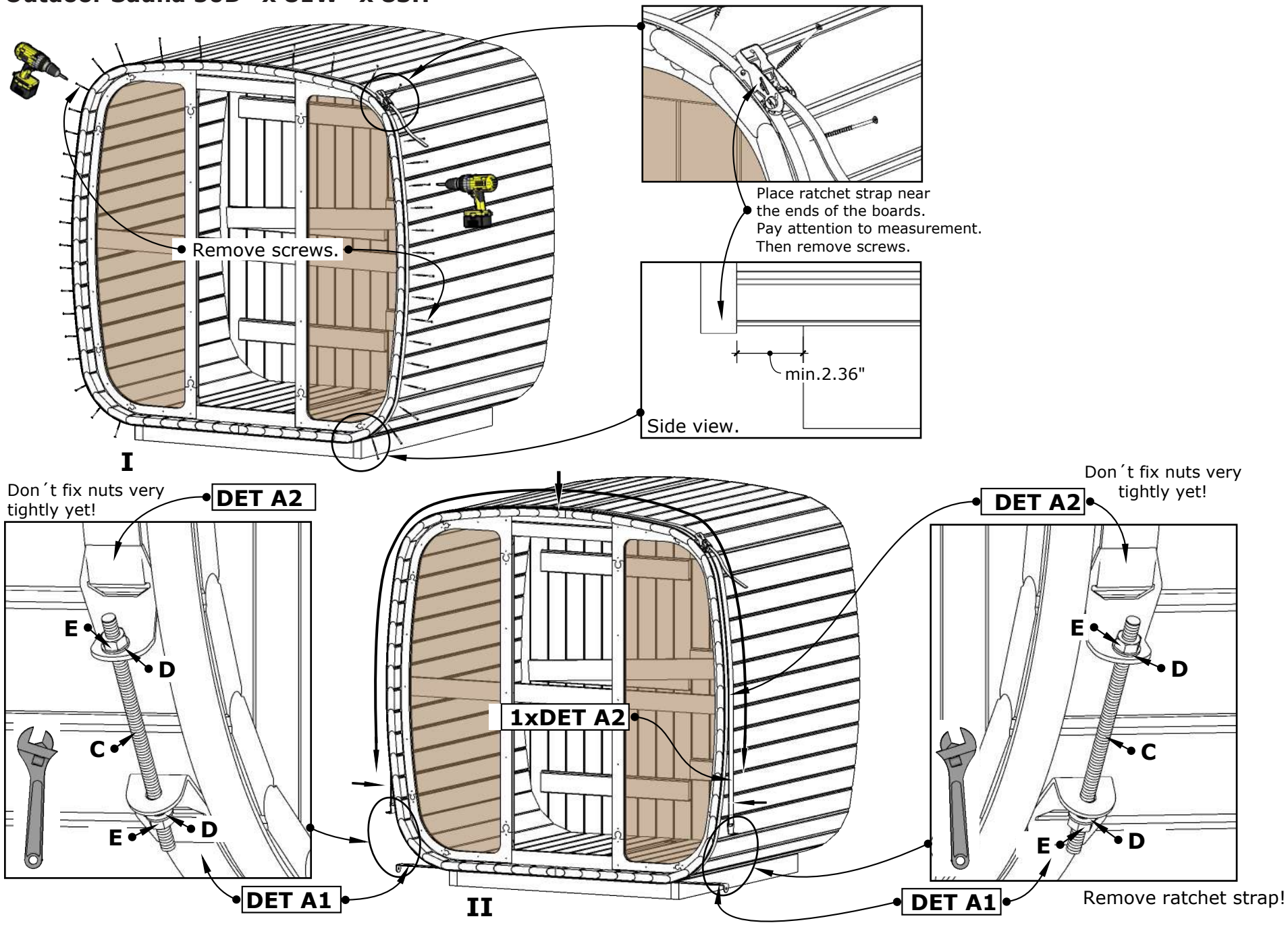

CL4G Outdoor Sauna 50D" x 81W" x 83H"

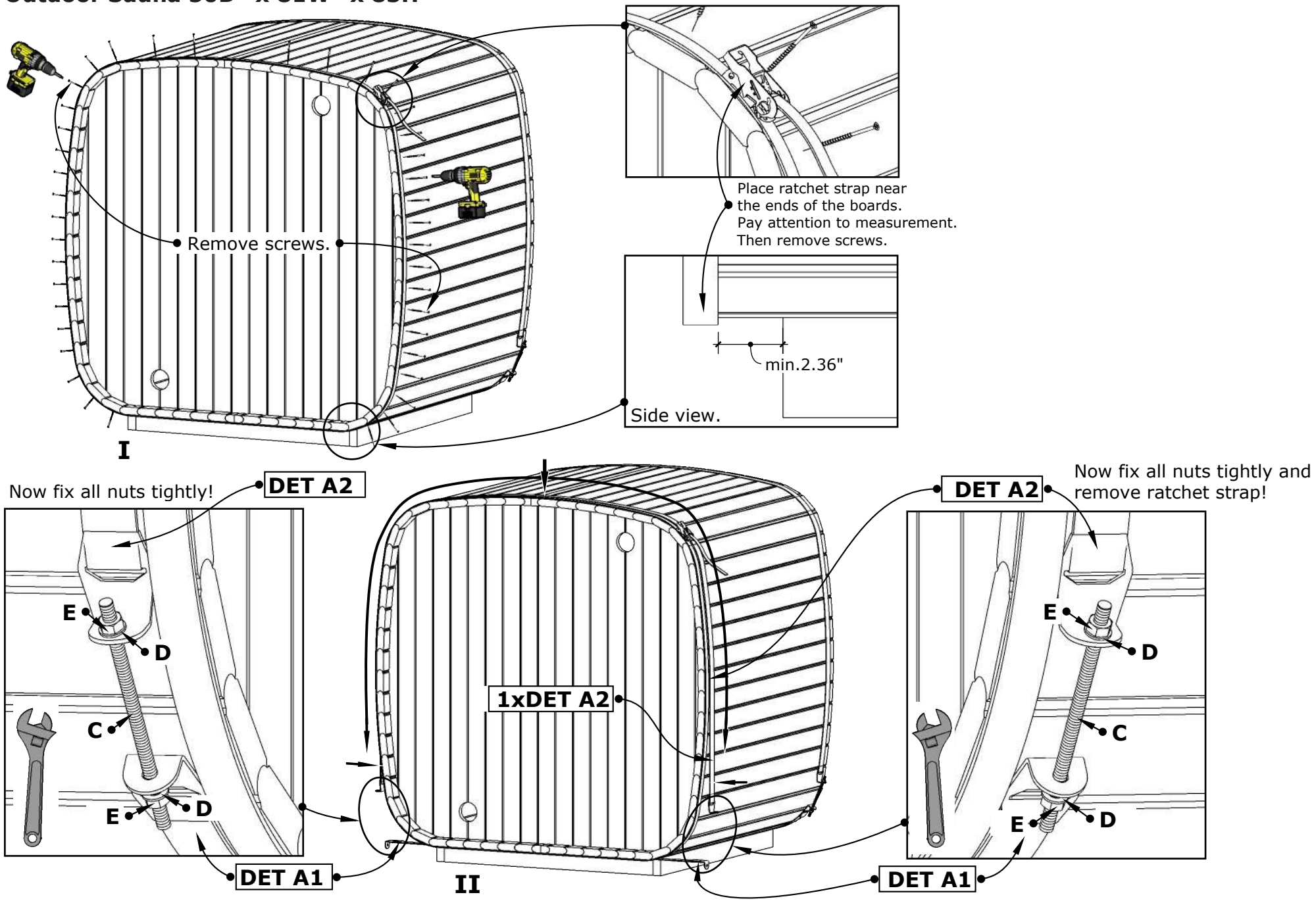

11.

CL4G Outdoor Sauna 50D" x 81W" x 83H"

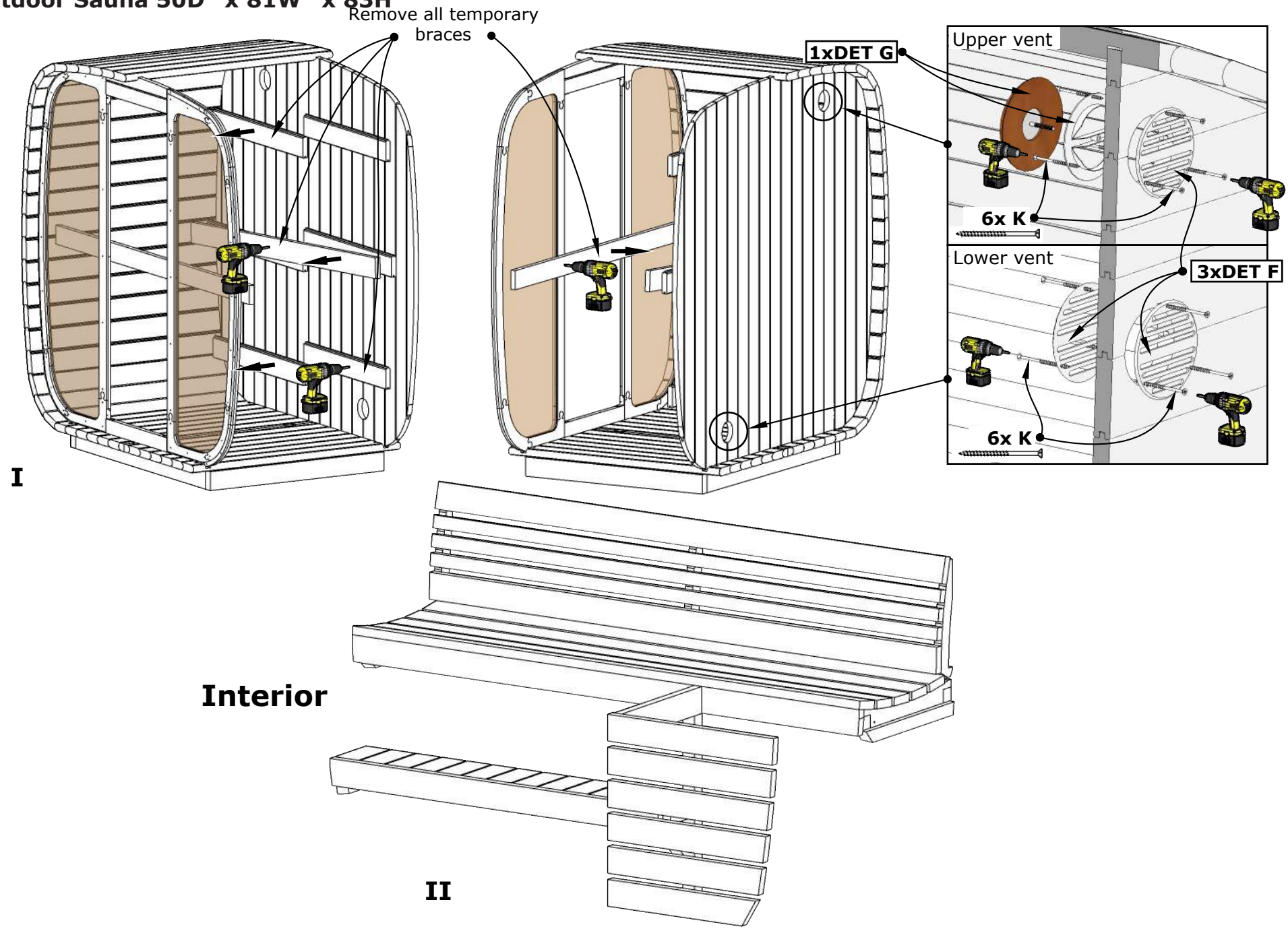

CL4G Outdoor Sauna 50D" x 81W" x 83H"

Use waterlevel for installation!

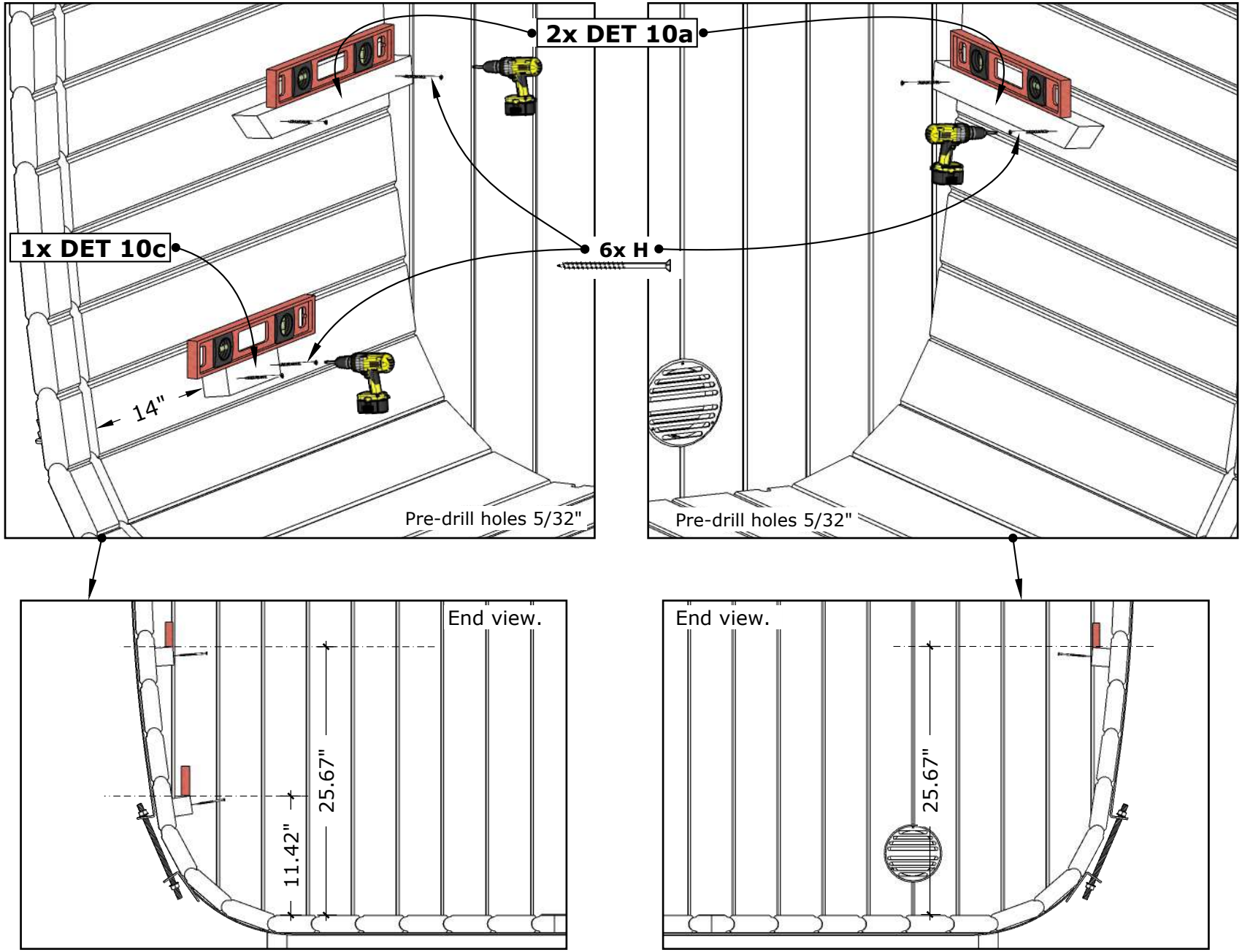

CL4G Outdoor Sauna 50D" x 81W" x 83H"

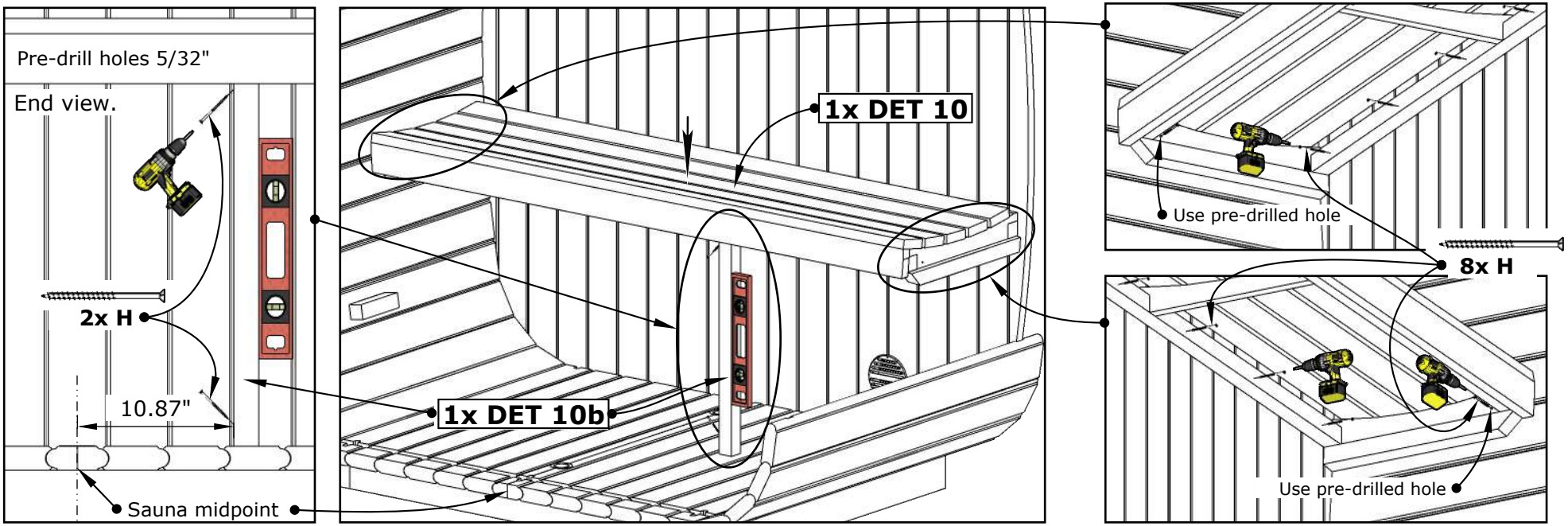

I

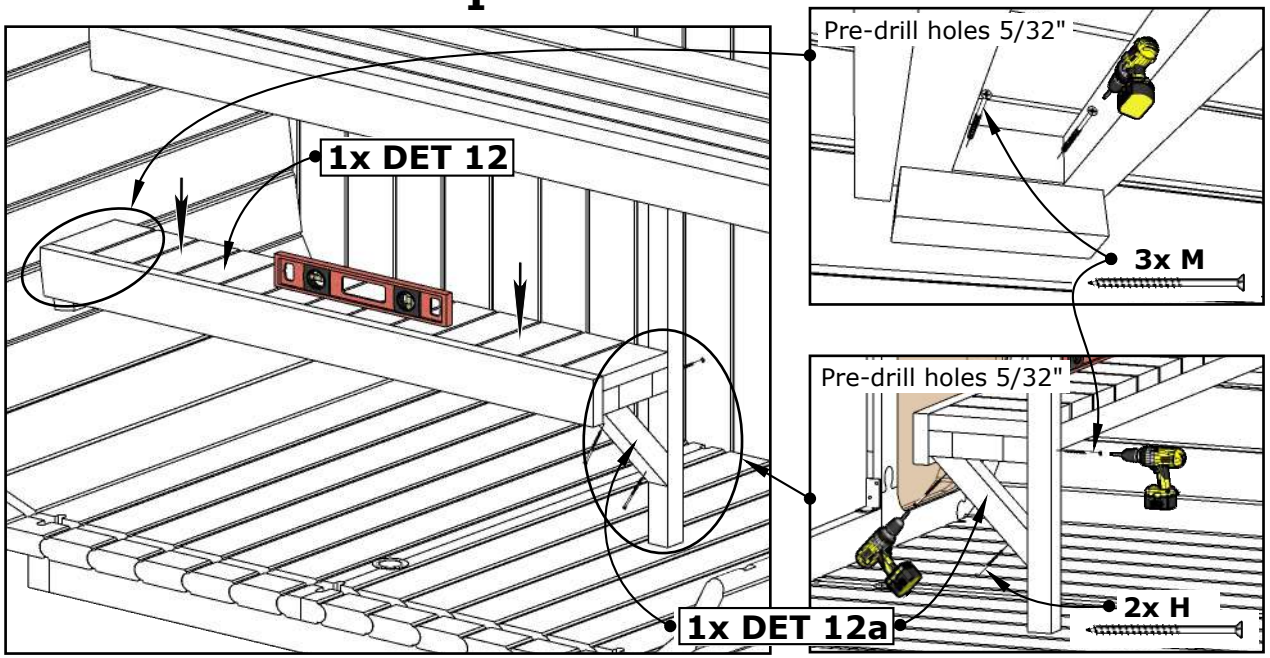

II

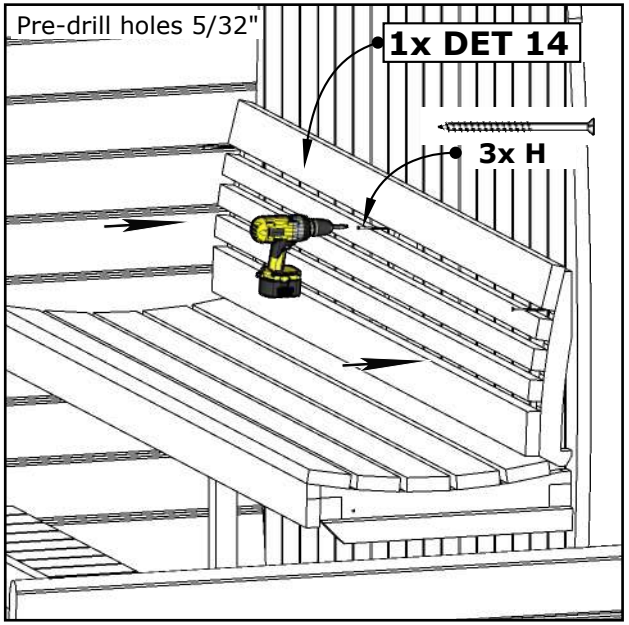

III

CL4G Outdoor Sauna 50D" x 81W" x 83H"

CL4G Outdoor Sauna 50D" x 81W" x 83H"

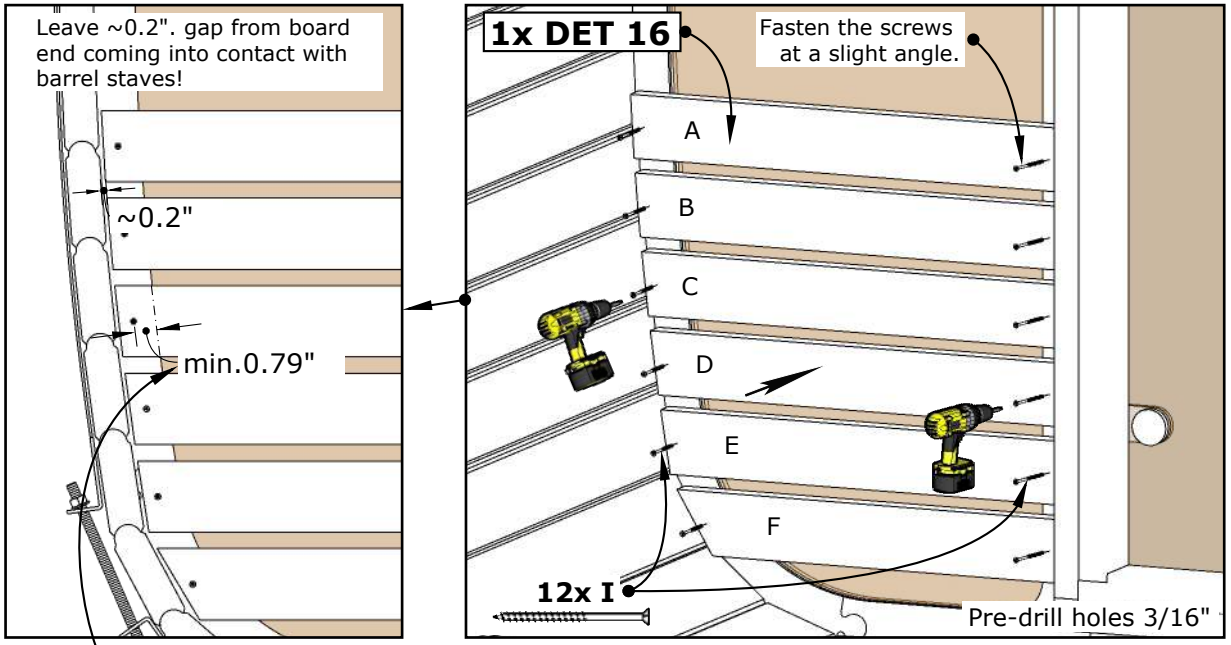

I

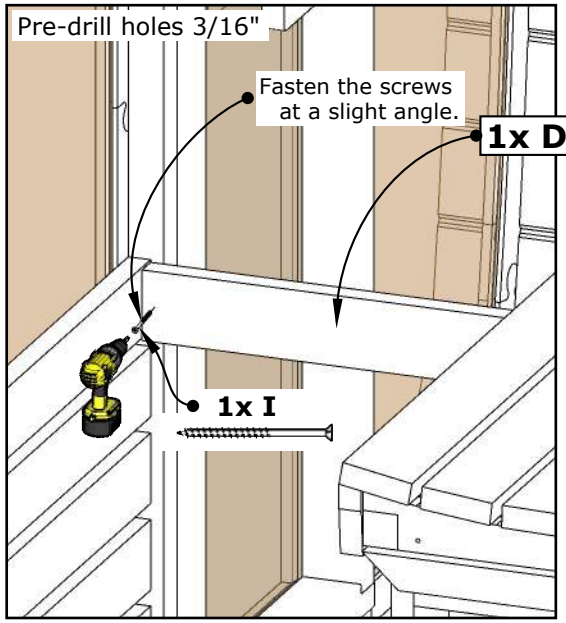

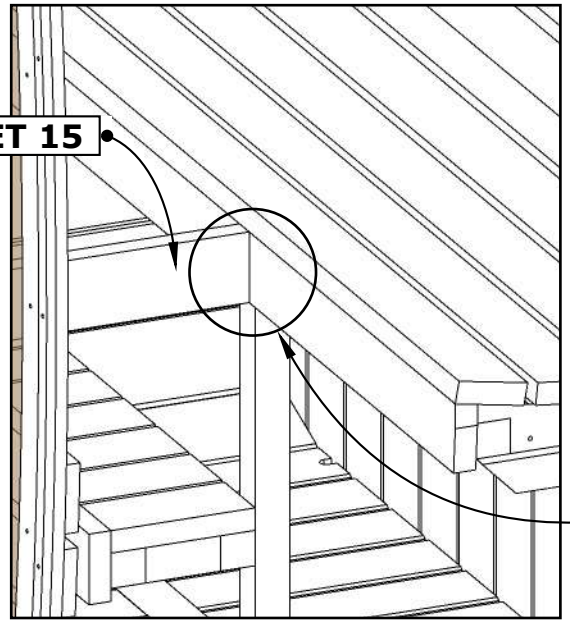

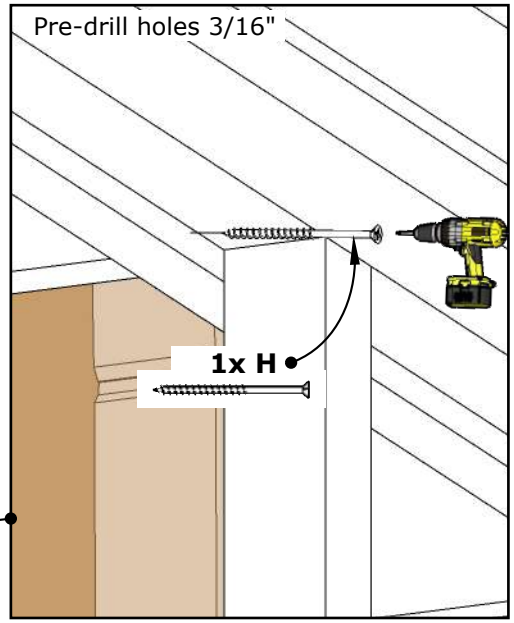

II

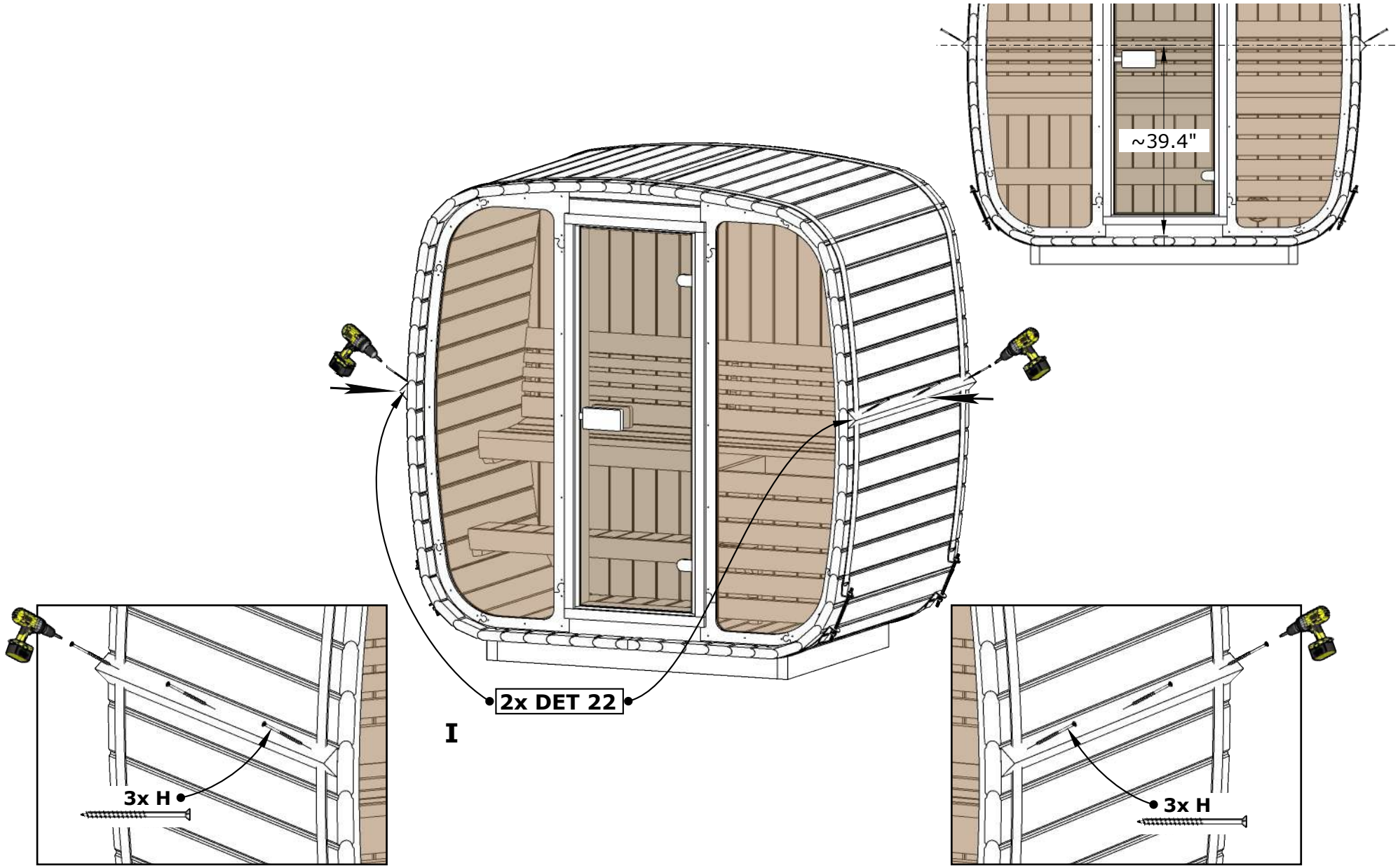
~39.4"
2x DET 22
I
3x H
3x H

CL4G Outdoor Sauna 50D" x 81W" x 83H"

Underlay felt installation manual.

Attention! Refer to underlay installation manual provided in package.

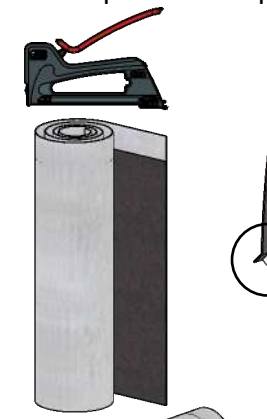

Remove bottom film first.

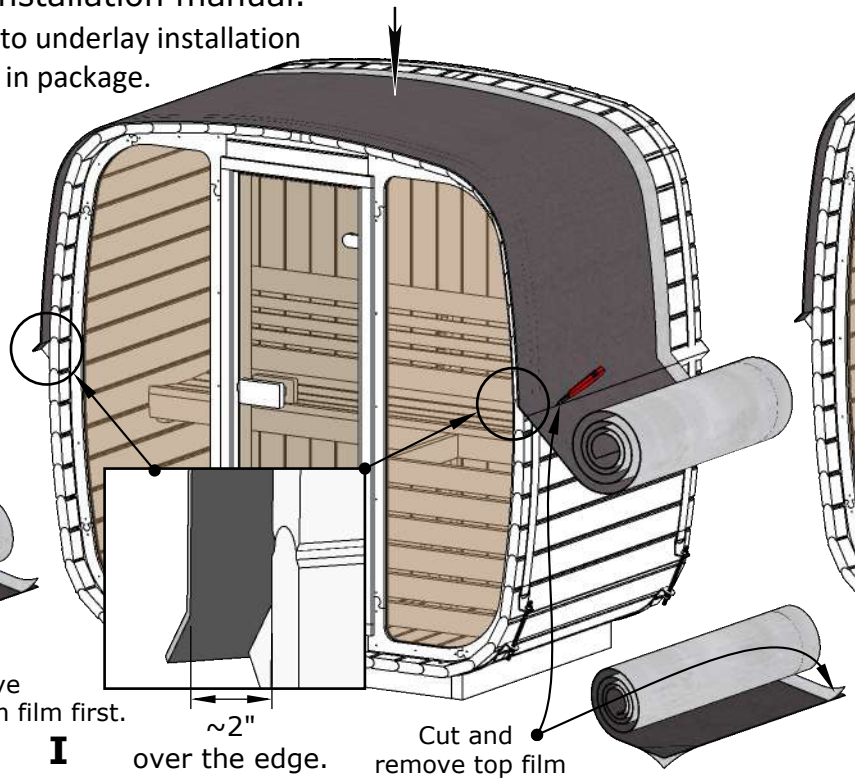

~2" over the edge.

Cut and remove top film

I

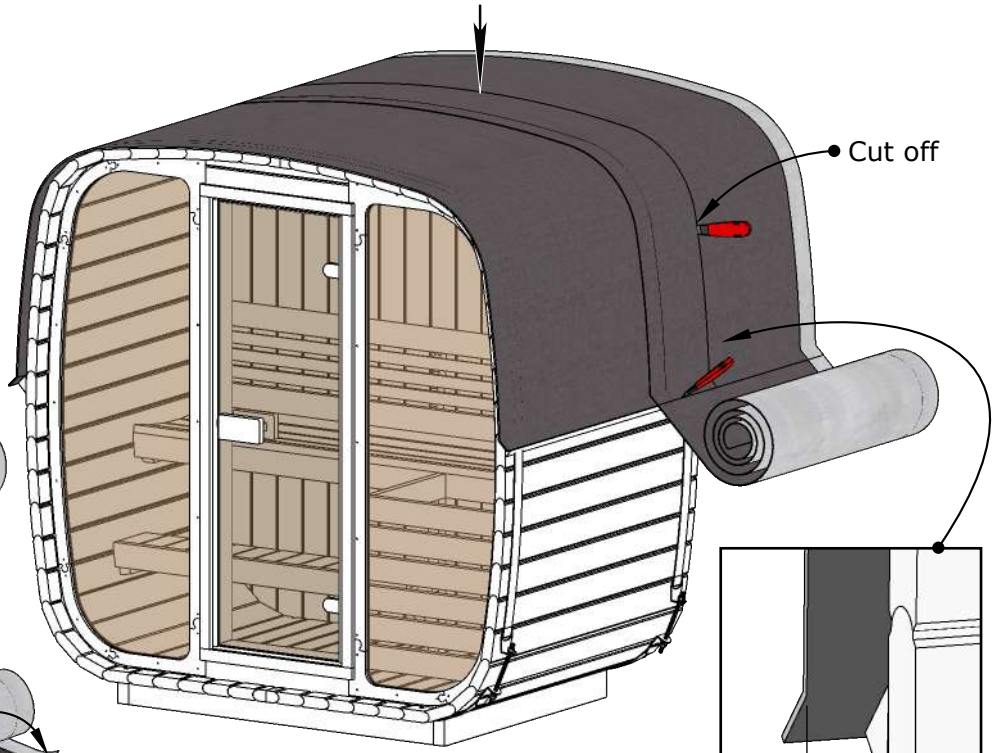

Cut off

Proceed same way as shown in diagram I

~2" over the edge.

II

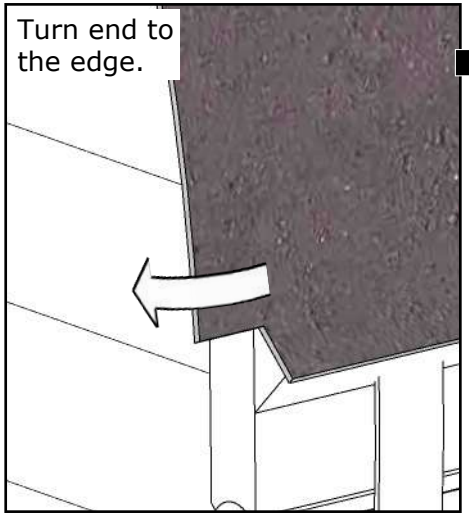

Turn end to the edge.

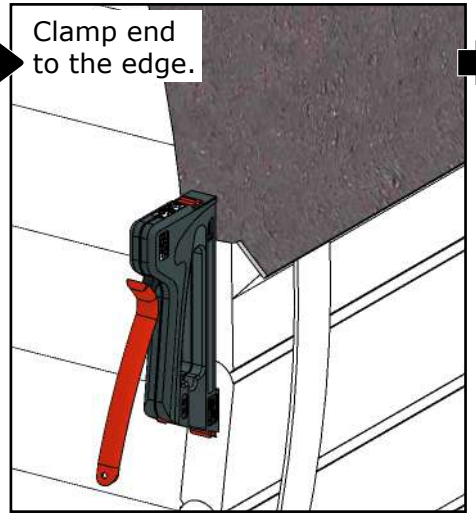

Clamp end to the edge.

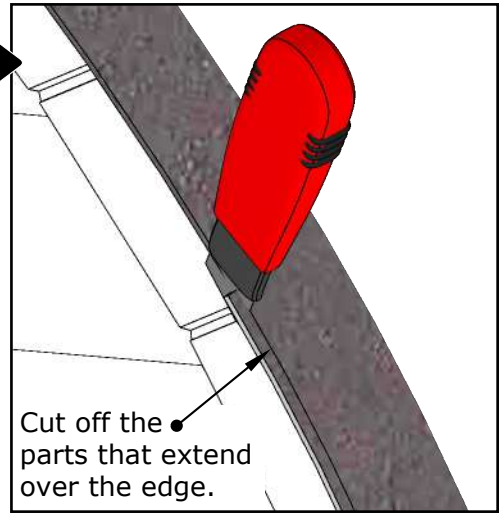

Cut off the parts that extend over the edge.

III

CL4G Outdoor Sauna 50D" x 81W" x 83H"

Attention! Refer to shingle installation manual provided in package.

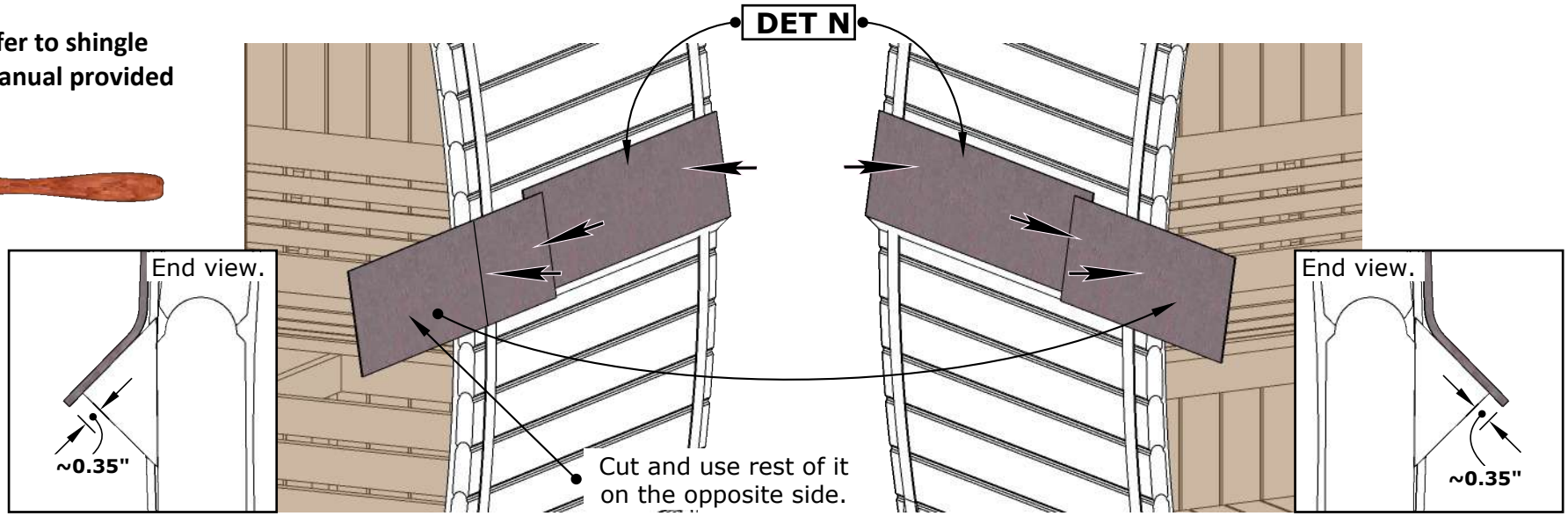

I

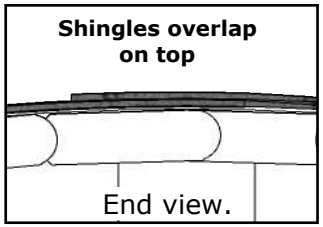

Attention! Refer to shingle installation manual provided in package.

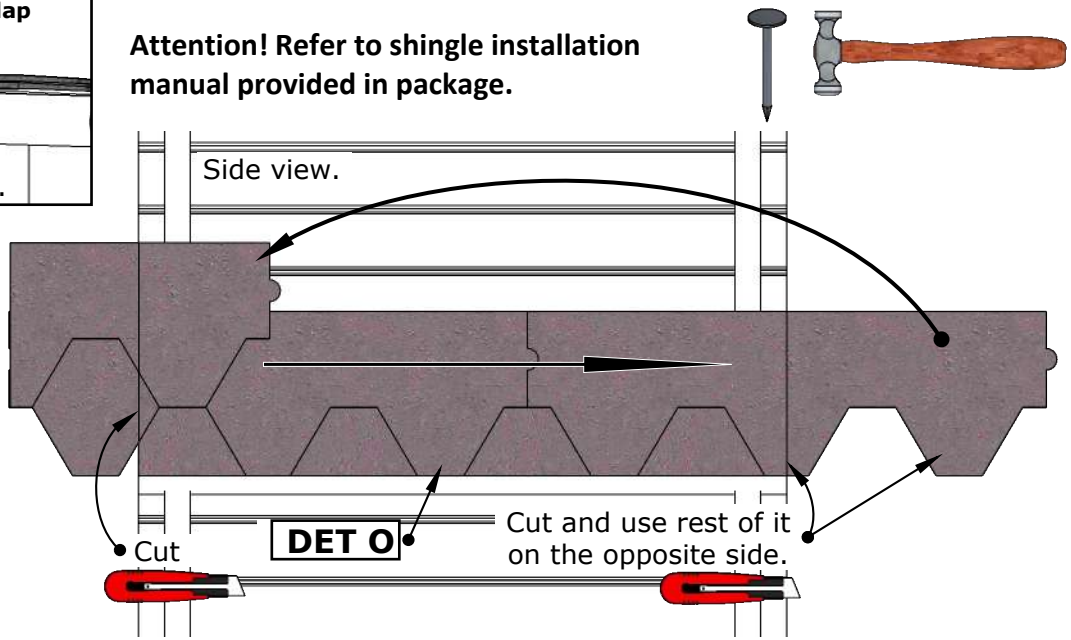

II

Attention! Refer to shingle installation manual provided in package.

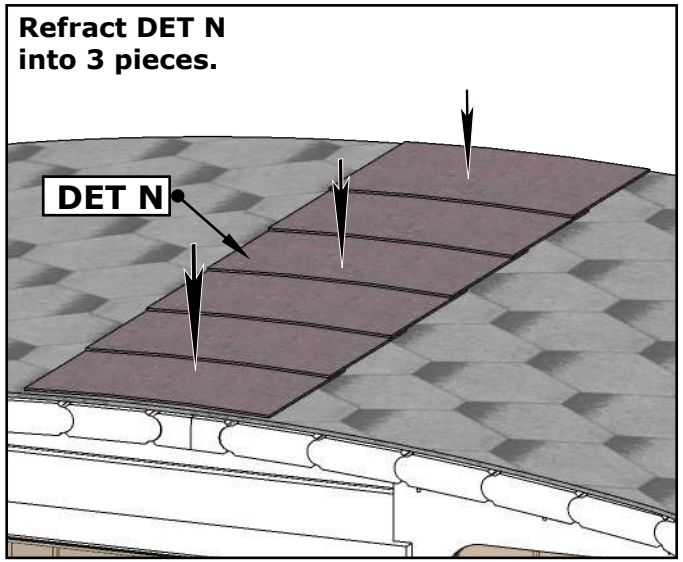

III

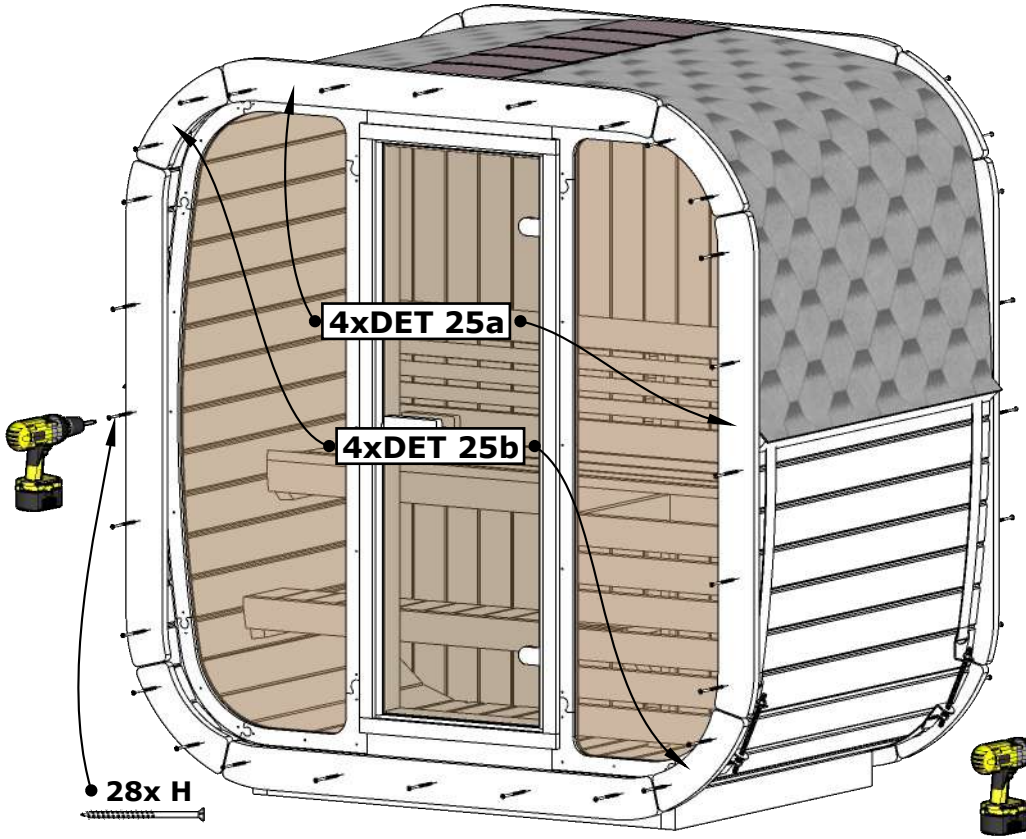
4xDET 25a
4xDET 25b
28x H

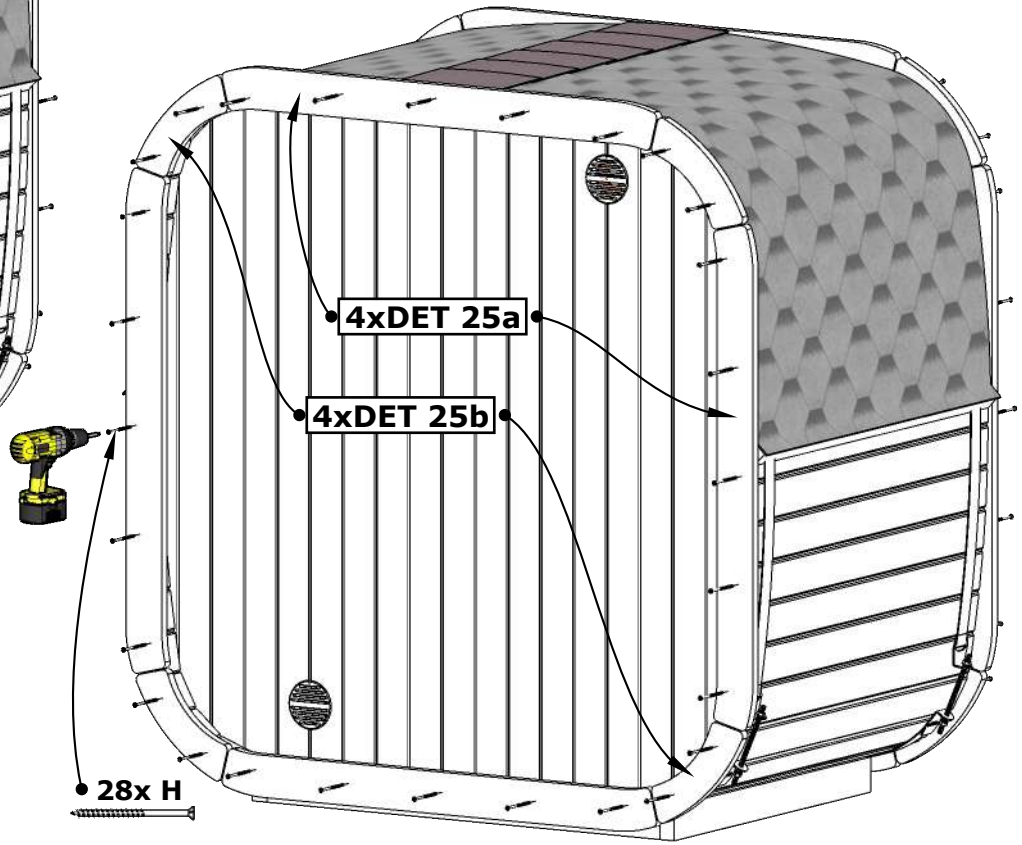
4xDET 25a
4xDET 25b
28x H